Industrial Shaper
5HP 1-Phase Manual

LAGUNA TOOLS
2072 Alton Parkway
Irvine, California 92606
Ph: 800.234.1976
www.lagunatools.com

Part No. MSHAPS45T-5-0167

© 2015, Laguna Tools, Inc. LAGUNA® and the LAGUNA Logo® are the registered trademarks of Laguna Tools, Inc. All rights reserved

TABLE OF CONTENTS

CHAPTER 1. GENERAL INFORMATION
1.0 Outlooking of spindle moulders ----------1-0
1.1 Machine identification ----------1-1
1.2 Notes for the user ----------1-1
1.3 Specifications ----------1-1
1.4 Noise level ----------1-2
1.5 Safety warnings ----------1-3
1.6 Safe working practice ---------- 1-5
1.7 Warning labels ---------- 1-14
1.8 Dimensions for spindle and tools ----------1-15
1.9 Recommended work area ----------1-16

CHAPTER 2. INSTALLATION
2.1 Unpacking and cleanup ----------2-1
2.2 Installation and leveling ----------2-2
2.3 Grounding information and power connections----------2-2

CHAPTER 3. USE-ADJUSTMENT
3.1 Control unit ----------3-1
3.2 Electrical controls----------3-1
3.3 Speed change and belt adjustment ----------3-2
3.4 Spindle lock ----------3-6
3.5 Interchangeable spindle installation and replacement ----------3-7
3.6 Spindle vertical travel adjustment ----------3-9
3.7 Spindle tilting adjustment ----------3-10
3.8 Assembling cutters to spindle ----------3-11
3.9 Table rings ----------3-11
3.10 Assembling and installing shaper fence and dust chute ----------3-12
3.11 Assembling miter gauge and clamp ----------3-14
3.12 Sliding table adjustment ----------3-17
3.13 Extension support adjustment ----------3-17
3.14 Tenoning carriage ----------3-17
3.15 Installing tenoning hood ----------3-18
3.16 Installing curved work guiding ----------3-19

CHAPTER 4. OPERATION
4.1 Straight work ----------4-1
4.2 Position of collars ----------4-2
4.3 Tenoning ----------4-3
4.4 Curved work ----------4-3

CHAPTER 5. MAINTENANCE
5.1 Lubrication ----------5-1
5.2 Periodical maintenance ----------5-2
5.3 Key handle for control cabinet ----------5-2

CHAPTER 6. TROBULE SHOOTING
6.1 TROBULE SHOOTING ----------6-1

CHAPTER 1. GENERAL INFORMATION

1.0 OUTLOOKING OF SPINDLE MOULDERS

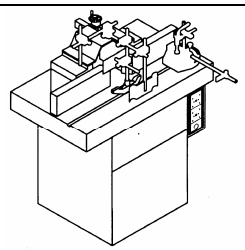	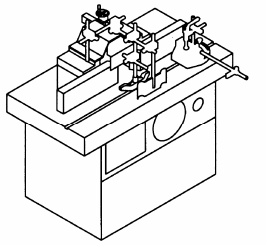	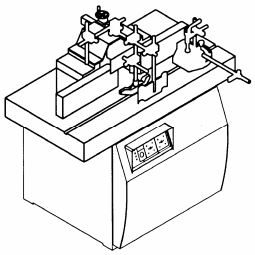
SS-510 / plus series	SS-511/512 series	SS-512T/512L backward tilt
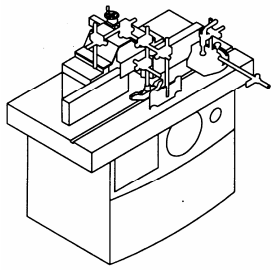	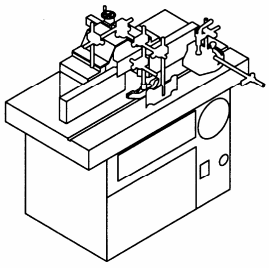	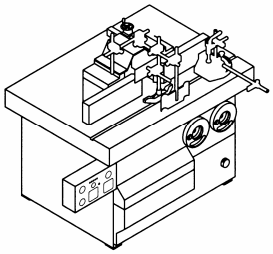
SS-512L series/SS-513 series	SS-513 pro series	SS-513 plus series
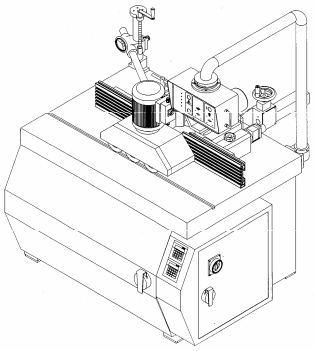	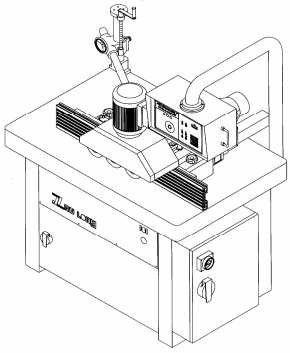	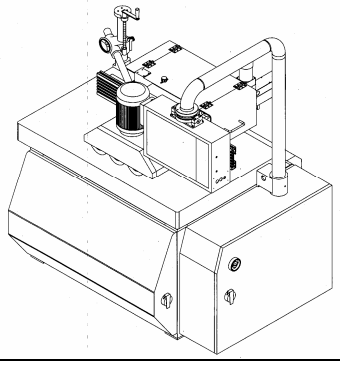
SS-513T Eplus w/ power feeder	PS-515 w/ power feeder	PS-515 plus w/ power feeder

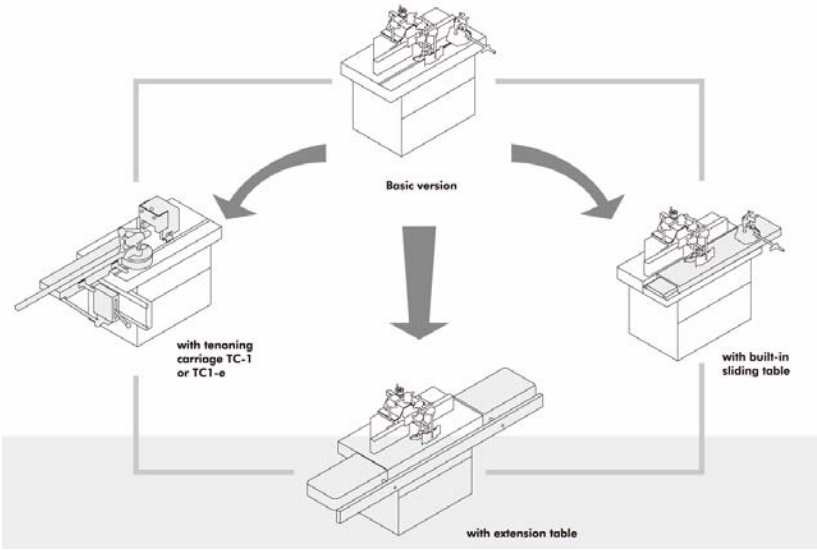

1-0

1.1 MACHINE IDENTIFICATION

Machine model and serial number are punched onto a metallic plate placed on the machines frame giving access to the electric housing.

For information concerning specifically the electric system pneumatic supply you must specify the data punched on the metallic plate.

Note: I.C.U.: Interruption short-circuit Capacity (KA) of breaking Utility

1.2 NOTES FOR THE USER

The machinery is intended to be used by a professional.

The machine was designed for shaping, tenoning wood as well as wood material; therefore the user is responsible for the damages due to the different use of the machine.

The handbook describes all the operations usually required for the machine maintenance.

Do not carry out operations not described in the handbook.

Operations which require the demounting of machine members as well as maintenance operations shall be carried out only by authorized technicians.

1.3 SPECIFICATIONS

spindle moulder		SS-510	SS-511	SS-512	SS-512L	SS-513	SS-513 pro	SS-513 plus
Dimension of working table	mm	600x700/600x900	700x900	800x1000	850x1300	900x1100	900x1300	950x1300
Dimension of extension table	mm	—	—	800x2500	850x2500	900x2500	900x2500	950x2500
Max. extension table support	mm	—	—	450				
spindle vertical stroke	mm	100	180	140/180	170	180	250	180
below table top	mm	180	180	210	210	250	250	320
above table top	mm	200	225	335	335	335	320	360
spindle speed	rpm	5500/7500/10000	3000/4000/6000/8000/100000(std.) 1500/3500/5500/7500/9000(opt.)					
Motor power	Kw	1.5/2.2/3	3.75	3.75/5.5	3.75/5.5	3.75/5.5/7.5	3.75/5.5/7.5	3.75/5.5/7.5
Rated current	A	~: 13/20/25 3~: 4/5.5/7.5	37(~)/11(3~)	11/15	11/15	11/15/20	11/15/20	11/15/20
Working stroke of the sliding	mm	640	840	940	1230	1070	1230	1230
spindle tilting	degree	-5～+30	-5～+45	-5/-45～+45/+10	-5～+45	-5～+45	-5～+45	-45～+45
Overall size(Basic)	mm	850x690x1200	850x900x1170	1230x1000x1340	1300x900x1320 1300X1340X1320	1100x900/1350x1350	1300x1210x1300	1300x1210x1400
Net weight(Basic)	kg	200	370	470/480	530/650	480/650	760	770
Range milling cutter diameter	mm	100	120	180	180	180	180	180
Range router bit diameter	mm	25.4	25.4	38	38	38	38	38
Max. workpiece (LxWxT)	mm	530x330x80(st.)	680x360x80(st.)	760x410x80(st.)	1000x450x80(st.)	850x450x80(st)	1000x450x80(st)	1000x450x80(st)
Electrical power supply: single phase models: AC 220 ~ 240V, 50 Hz,, 3 phase models: AC 3~, 380 ~415V, 50Hz								

spindle moulder		SS-513T Eplus	PS-515/L	PS-515 plus
Dimension of working table	mm	850x1300	850x1300	850x1300
Dimension of extension table	mm	800x2500	800x2500	800x2500
Max. extension table support	mm	450	450	450
spindle vertical stroke	mm	180	250	130
below table top	mm	320	320	320
above table top	mm	360	360	360
spindle speed	rpm	3000/4000/6000/ 8000/100000	3000/4000/6000/ 8000/100000	3000/4000/5000/6000/ 8000/100000
Motor power	Kw	3.75/5.5/7.5	5.5/7.5	5.5/7.5
Rated current	A	11/15/20	15/20	15/20
Working stroke of the sliding	mm	1230	1230	1230
spindle tilting	degree	-45～+45	-	-45～+45
Overall size(Basic)	mm	1300x1210x1400	1510x850x1840	1300x1700x1900
Net weight(Basic)	kg	770	800	850
Range milling cutter diameter	mm	180	180	180
Range router bit diameter	mm	38	38	38
Max. workpiece (LxWxT)	mm	1000x450x80(st)	1000x450x80(st)	1000x450x80(st
Electrical power supply: single phase models: AC 220 ~ 240V, 50 Hz,, 3 phase models: AC 3~, 380 ~415V, 50Hz				

BASIC MODEL IDENIFICATION

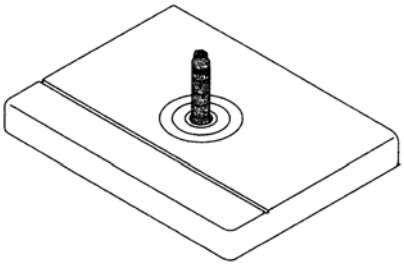

M with fixed spindle & table

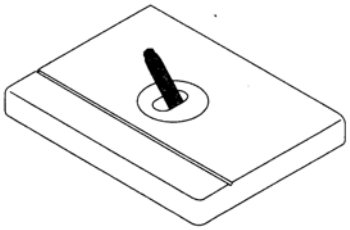

T with tilting spindle and fixed table

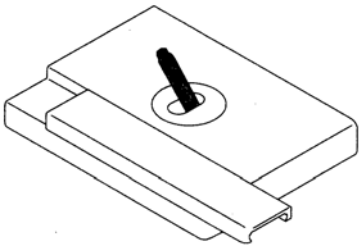

TS with tilting spindle and sliding table

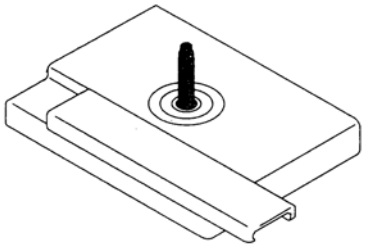

MS with fixed spindle and sliding table

1.4 NOISE LEVEL

A-weighted sound pressure level measuring at workstation:

SS-510TS	99.04 dB(A)
SS-513T plus	92.93 dB(A)
SS-512TL	93.79 dB(A)
SS-512M+TC1	96.01 dB(A)

A-weighted sound power level measuring :

SS-510TS	110.6 dB(A)
SS-513T plus	104.56 dB(A)
SS-512TL	104.74 dB(A)
SS-512M+TC1	115.57 dB(A) ,SS-515 plus 94.6dB(A)

Associated uncertainty K = 4 dB

Measured made in accordance with EN ISO 3746:1995

"The figures quoted are emission levels and are not necessarily safe working levels. Whilst there is a correlation between the emission and exposure levels, this cannot be used reliably to determine whether or not further precautions are required. Factors that influence the actual level of exposure of the work-force include the characteristics of the work room, the other sources of noise, etc. i.e. the number of machines and other adjacent processes and the length of time for which an operator is exposed to the noise. Also the permissible exposure level can vary from country to country. This information, however, will enable the user of the machine to make a better evaluation of the hazard and risk

《**NOTE**》Dust extraction equipment shall be connected and be switched on before commencing machining.

1.5 SAFETY WARNINGS

Woodworking can be dangerous if safe and proper operating procedures are not followed. As with all machinery, there are certain hazards involved with the operation of the product. Using the machine with respect and caution will considerably lessen the possibility of personal injury. However, if normal safety precautions are overlooked or ignored, personal injury to the operator may result. Safety equipment such as guards, push sticks, (table pressure pad) hold-down, goggles, dust masks and hearing protection can reduce your potential for injury. But even the best guard won't make up for poor judgment, carelessness or inattention. Always use common sense and exercise caution in the workshop. If a procedure feels dangerous, don't try it. Figure out an alternative procedure that feels safer. Remember: Your personal safety is your responsibility.

This machine was designed for certain applications only. We strongly recommend that this machine not be modified and/or used for any application other than that for which it was designed. If you have any questions relative to a particular application, do not use the machine until you have first contacted us to determine if it can or should be performed on the product.

GENERAL SAFETY RULES

《**WARNING**》Failure to follow these rules may result in serious personal injury.

1. Do not operate your shaper (spindle moulder) until it is completely assembled and installed according to the instruction manual.
2. For your own safety, read instruction manual before operating the tool. Learn the tools application and limitations as well as the specific hazards peculiar to it.
3. If you are not thoroughly familiar with the operation of Wood Shapers, obtain advice from your supervisor, instructor, or other qualified person.
4. Keep guards in place and in working order.
5. Always wear eye protection or safety glasses. Also use face or dust mask if cutting operation is dusty.
6. Make sure wiring codes and recommended electrical connections are followed and that machine is properly grounded.
7. Remove adjusting keys and wrenches. Form habit of checking to see that keys and adjusting wrenches are removed from tool before turning it "ON".
8. Always keep hands away from cutting tool.
9. Wear proper apparel. No loose clothing, gloves, neckties, rings, bracelets, or other jewelry to get caught in moving parts. Non-slip footwear is recommended. Wear protective hair covering to contain long hair.
10. Keep work area clean. Cluttered areas invite accidents.
11. Don't use in dangerous environment. Don't use woodworking machinery in damp or wet locations, or expose them to rain. The workshop should be with a sufficient general lighting for a normal operation. Keep work area well-lighted.

12. Keep children and visitors away. All children and visitors should be kept a safe distance from work area.
13. Don't force tool. It will do the job better and be safer at the rate for which it was designed.
14. Use right tool. Don't force tool or attachment to do a job for which it was designed.
15. Replace the warning labels if they fall off or wear off.
16. Don't overreach. Keep proper footing and balance at all times.
17. Maintain tools in top condition. Keep tools sharp and clean for best and safest performance. Follow instructions for lubricating and changing accessories.
18. Keep cutters sharp and free of all rust and pitch.
19. Disconnect machine before servicing and when changing accessories such as bits, cutters, etc.
20. Make all adjustments with the power "OFF".
21. Use recommended accessories. The use of improper accessory may cause hazards or risk of injury.
22. Check damaged parts. Before further use of the machine a guard or other part that is damaged should be carefully checked to ensure that it will operate properly and perform its intended function. Check for alignment of moving parts, binding of moving parts, breakage of parts, mounting, and any other conditions that may affect its operation. A guard or other part that is damaged should be properly repaired or replaced.
23. Never leave machine running unattended. Don't leave tool until it comes to a complete stop.
24. Before leaving the machine, make sure the work area is clean.
25 Do not operate tool while under the influence of drugs, alcohol or any medication.
26. The dust generated by certain woods and wood products can be injurious to your health. Always operate machinery in well-ventilated areas and provide for proper dust removal. A use of a wood dust collection system shall be connected in the guard intended outlet.

Special safety rules for the wood moulder

1. Never run the stock between the fence and the cutting tool.
2. The fence halves should be adjusted endwise so the opening is never more than that, which is required to clear the cutter.
3. The cutter should be positioned below the workpiece whenever possible. This lessens the possibility of injury or a damaged workpiece which could occur if the workpiece becomes trapped between the cutter and table.
4. Always use the miter gage and clamp attachment when edge shaping work less than 150mm wide.
5. Make sure the keyed washer is positioned directly under spindle nut and that spindle nut is securely tightened before operating.
6. Do not use awkward hand positions.
7. Make certain spindle lock is released before starting machine.
8. When shaping with collars, the cutter should be positioned below the collar whenever possible.
9. Check speed setting to make sure it is proper for the cutter and workpiece.

10. Always feed workpiece against the cutter rotation.
11. Make sure spindle draw bar and draw bar nuts are securely tightened before operating.
12. Turn the main switch to “O”, indicate so with a sign and padlock the main switch before making all adjustments or servicing. (CE)
13. The wood dust collection system shall be used during maching. (Please refer to 3-10)
14. Dust extraction equipment shall be switched on before commencing a machining.
15. Make sure power “OFF” before cleaning with vacuum cleaner.

1.6 SAFE WORKING PRACTICE

1. Operator training

It is essential that all operators of vertical spindle molding machines are adequately trained in the use, adjustment and operation of the machine, this covers in particular:

a) The dangers associated with the operation of the machine.

b) The principles of machine operation, correct use and adjustment of the fence, jigs and safeguards.

c) The correct selection of tools for each operation.

d) The safe handing of the workpiece when cutting.

e) The position of the hands relative to the cutters and the safe stacking of the workpieces before and after cutting.

f) The dealer should provide the Information that operators are adequately trained in the use, adjustment and operation of the machine including the correct use, connection instruction for a demountable power feed unit and positions to be taken by operator. This includes in particular:

1) for training:

i) the principles of machine setting and operation including the correct use and adjustment of workpiece holding and guiding devices, guards and tool selection.

ii) the safe handing of the workpiece when cutting.

iii) the correct use and adjustment of safety appliances such as jigs, templates, extension tables and end stops.

iv) the use of personal protective equipment for ear and eye protection.

2) before machine setting to:

i) ensure that the tools used are sharp, selected, maintained and adjusted in accordance with the tool manufactures instructions.

ii) use table rinfs or table insert to close the gap between the table and the spindle to a minimum.

iii) use special equipment for setting e.g. gauges where practicable.

iv) take care when handing tools.

v) ensure that when using a demountable power feed unit it is plugged into the socket provide for that purpose on the machine.

3) for workpiece guiding the use of:
   i) a fence.
   ii) a false fence wherever possible to minim is the gap between the cutter(s) and the fence plates.
   iii) a push block or push stick to aid hand feeding or wherever possible a de-mountable power feed unit.
   iv) roller or extension table to support long workpiece.

4) before machine to:
   i) fit the tooling to the machine to operate in the correct direction of rotation and feed the workpiece to the tools against the direction of the spindle.
   ii) ensure that the selected rotational speed is appropriate for the tooling being used.
   iii) select and adjust the guard.
   iv) because of the wide variety of work which can be undertaken on vertical spindle moulding machine no one type of safeguard can be considered effective for all conditions. Each operation should be considered separately and the best practicable safeguard selected. The type of tool, cutting edge projection and the height at which the tool is set, will determine the minimum size of the hole in the table.
      1) for straight work: in order to prevent access to the tool during straight work it is necessary to use in conjunction with the fence either a de-mountable power feed unit or fence and table pressure pads equipped with special shoes depending upon the workpiece dimension.
      2) stopped work: in order prevent access to the tool during stopped work it is necessary to use in conjunction with the fence, table and fence pressure pad equipped with special shoes depending upon the workpiece dimension.
      3) in order to prevent kickback it is necessary to use back and/or front end stops fixed to the fence, table or fixed to an extension table.
      4) unless the workpiece is large enough to provide a safe and adequate hand hold, the use of a jig is recommended.
      5) for curved work: in addition to the use of a guiding steady(lead in device) and in conjunction with the adjustable guard (hand protector) a template is useful to prevent access to the tool.
      6) for bevel cutting: in addition to the use of the fence and de-mountable power feed unit or pressure pads, it is important to ensure firm support of the workpiece by using a special jig or adjustable canting fence in order to prevent access to the tool.
      7) for tenoning: in order to feed the workpiece safely passed the tool during tenoning it is necessary to use the traveling table and enclosure provided by the manufacturer.

5) Waste and Disposal

   Please concentrate the waste chip and dispose them in accord with the EU legislation and policies.
   Before dismantling the machine, disconnect all energy sources carefully.
   (1) Dismantling of Electrical Systems
   Before disconnect the cables from the power cabinet, please confirm first that all switches have been closed.

Removing of power cabinet and connecting cable.

1-7

(2) Dismantling of Mechanical Components

Before dismantling the mechanical body, please clean the whole structure in order to dismantle conveniently.

(3) Scrapping and Disposal

In compliance with the local and the European laws to have to correctly dispose the materials by different way according of its composition. If in any doubt,

please contact us.

6) Fire extinguisher:

Fire safety is very important.

Each workplace must have a full complement of the proper type of fire extinguisher (Such as dry powder fire extinguishers) for the fire hazard.

All workplace ignition sources such as smoking, welding, burning etc., must be properly controlled.

7) Lighting:

In general a maintained illuminance of at least 500 lx shall be provided.

And the lighting requirements specified in this European Standard are based on average difficulty of visual tasks, found in the work space during intended use of the

machine (normal operation, abnormal operation, servicing)

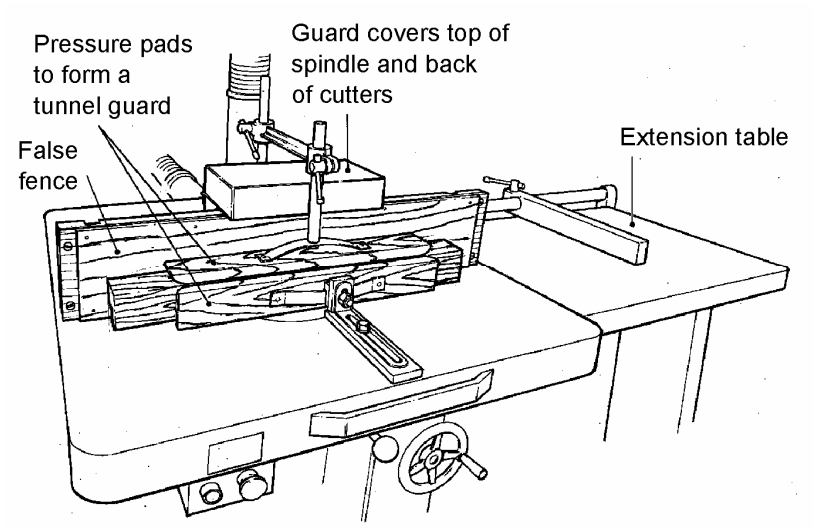

Vertical spindle moulding machine fitted with two Shaw guards forming a tunnel. The dimensions of the pressure pads prevent access by the operator to the cutters when the workpiece is removed

Fig. 1.1.1

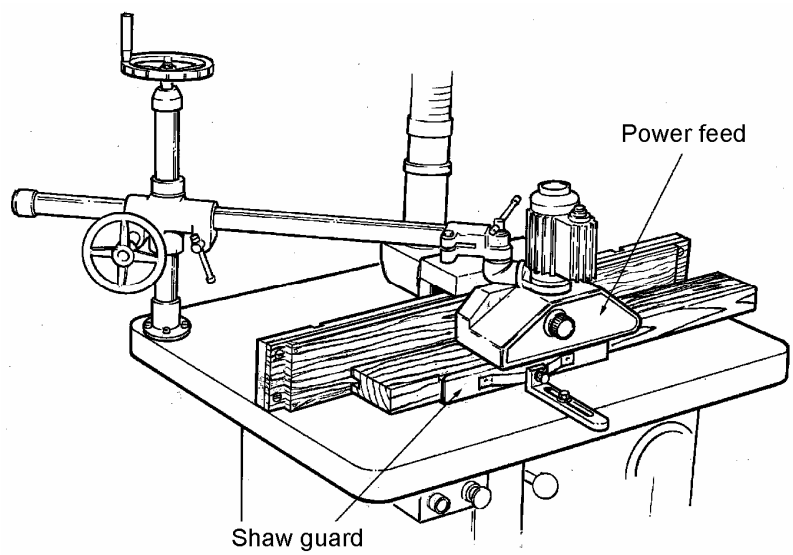

Use of power feed and side pressure pad for straight work

Fig. 1.1.2

1-9

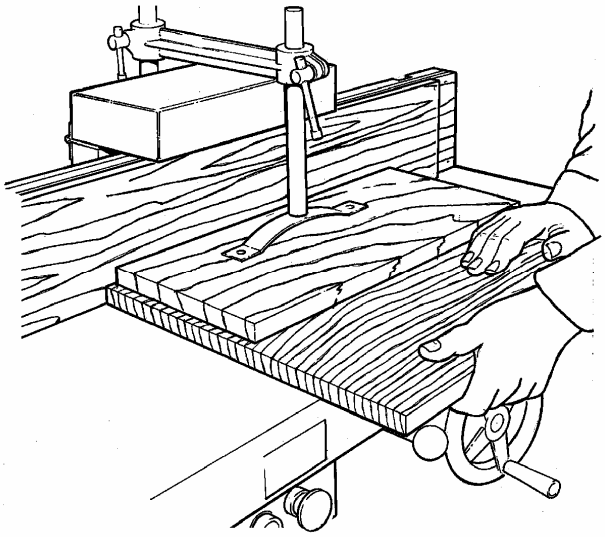

Straight work with only the top pressure pad in use

Fig1.1.3

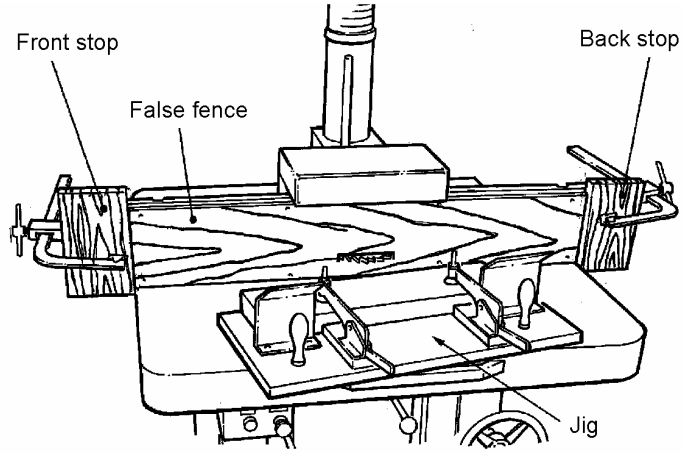

Jig (note toggle clamps and handles) and back/front stops for producing stopped work

Fig. 1.1.4

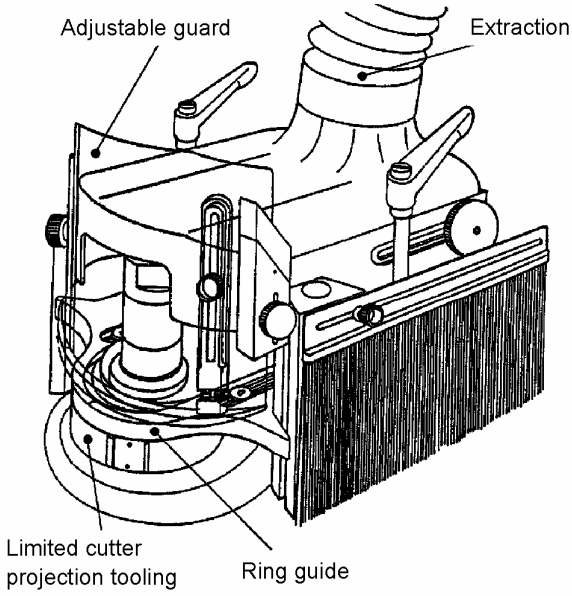

Example of guard and guiding device for curved work (source BS EN 848-1: 1999)

1-10

Fig.1.1.5

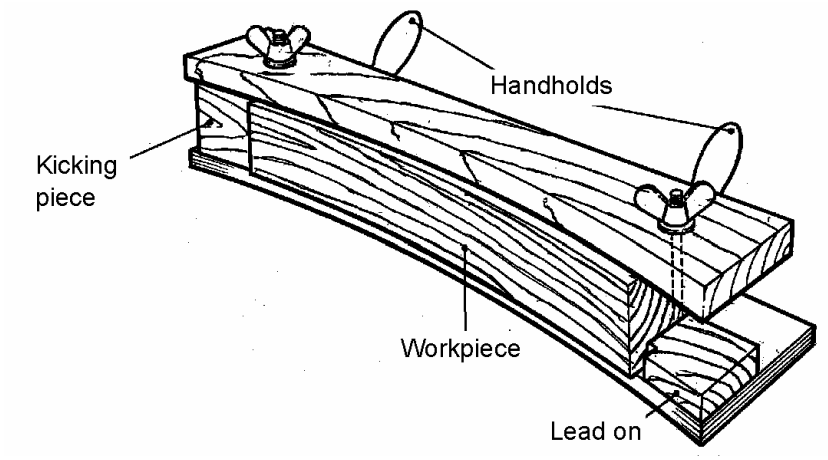

Box jig

Fig. 1.1.6

2. Stability

For the machine to be used safety the machine shall be stable and securely fixed to the floor or a stable structure.

3. Machine setting and adjustment

a) The machine shall be isolated from the power source before any adjustments are made.

b) For clamping and setting of tools refer tool manufacturers recommendations.

c) For safe and efficient cutting the tooling shall be suitable for the material being cut.
The tools shall be sharp and properly set with tools holders carefully balanced.

d) After a set/or adjustment/or repair work or a trouble shooting, please check the safety relevant functions whether normal or not before a use.

4. Handing of tools

i) Care shall be exercised when handing tools, tool carriers shall be used wherever practicable.

ii) That only tools conforming to EN 847-1:2005 and EN 847-2:2001 and marked MAN shall be used in order to reduce severity of injuries and kickback speed.

5. Setting the tool in the machine

Use special equipment e.g. gauges for setting the tool when machine is standstill.
Table rings shall be used to close the gap between the table and the spindle to a minimum.

6. Fence adjustments

a) The fence shall always be used for straight work cutting to provide adequate guiding workpiece.

b) A false fence shall be used wherever possible to minimize the gap between the cutters and the main fence.

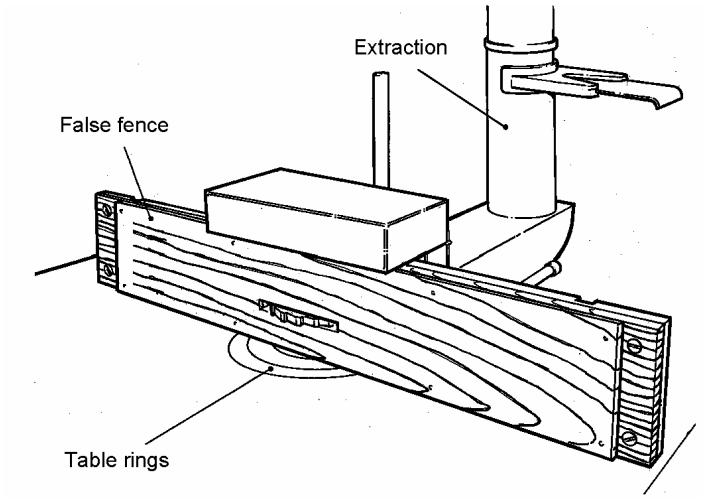

The false fence greatly reduces the exposure of dangerous parts

Fig. 1.1.7

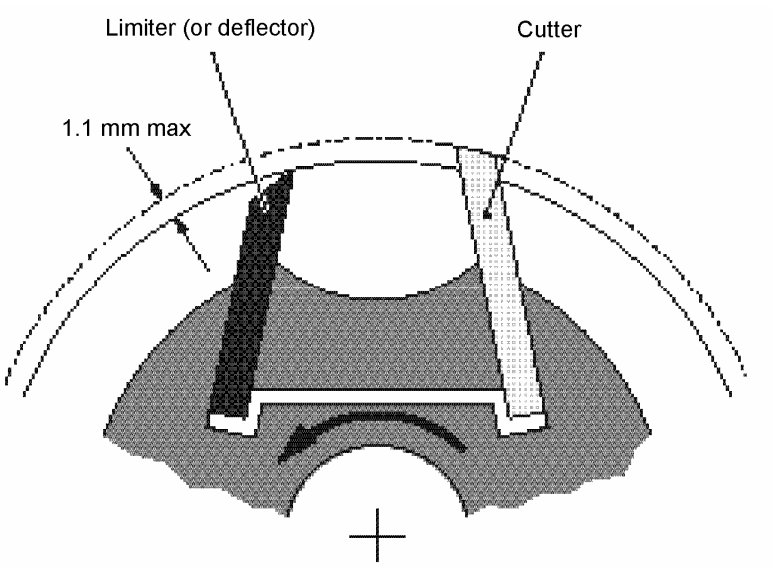

Example of limited cutter projection tooling

Fig. 1.1.8

c) A power feed device shall be used wherever possible to minimize the gap between the cutters and the main fence.

d) When hand feeding against the fence a push stick to aid feeding shall be used in conjunction with the guard.

e) Roller trestles or extension table shall be used to support long workpieces.

7. Direction of rotation

It is most important that the tooling is fitted to the machine to operate in the correct direction of rotation. The operator shall ensure that the workpiece is fed to the tools against the direction of spindle rotation.

7a. Speed selection

The operator must ensure that the correct rotational speed has been selected and is appropriate for the tooling being used on the machine.

8. Machine operation, guard selection and adjustment

Because of the wide variety of work which van be undertaken on vertical spindle molding machines using different types of top spindles, cutter blocks and cutters, no one type of safeguard can be considered effective for all conditions. Each operation should be considered separately and the best practicable safeguard selected for that particular job. Also, the type of cutter block, the cutter projection and the height at which the block is set, will determine the minimum size of the hole in the table. This can be obtained by using the loose rings provided so as to give the smallest possible hole, thus reducing the risk of the workpiece dipping and catching the edge as it passes over the gap.

Guarding shall enclose the cutters to the greatest extent permitted by the nature of the operation.
A power feed unit fitted to a vertical spindle molding machine with a straight fence can have the effect of enclosing the cutters to the greatest extent practicable and often represents the best method of guarding on these machines. Such feed units shall be easily adjustable to suit different sizes of workpieces and should not in themselves create a trapping hazard.

If a power feed is not used, pressure pads with the table and fence spring loaded pressures forming a tunnel through which the workpiece can be fed shall be used in conjunction with a false fence or other means of closing the gap between fences.

9. Straight work where the molding extends over the full length of the workpiece

Work of this type is done with the aid of a straight fence and, in most cases; the workpieces are of regular rectangular section throughout their length. The workpieces, can, therefore, be guided in the angle formed by the table and the fence. Vertical and horizontal spring loads pressure pads van be arranged to form a tunnel through which the workpiece can be fed. A following piece can be used to feed the previous one, with the final piece being completed by using a push stick. When machining thin panels the top spring pressure pad only may be necessary, providing its width is adequate.
Specialized shoes shall be used according to the workpiece dimension.

1-13 On a vertical spindle molding machine the gap between the two halves of the straight fence has to be

wide enough to give clearance for the cutters. This allows unnecessary exposure of the cutters, the cutter block and the spindle, and in addition the leading end of the workpiece may foul the edge of the take-off half of the fence. These risks are eliminated by the use of a false fence or by a suitable proprietary alternative which fills the gap between the fences. Care shall be taken in the making of a false fence. It is recommended that the cutter opening shall be made by a controlled screw adjustment on the fence on to the cutter and not by pushing the fence on to cutter by hand.

10. Stopped work

Straight work where the cut extends over part of the length of the workpiece.

Work of this nature is usually referred to as stopped work. The cutters have to break into the solid face, instead of starting the cut at the beginning of the workpiece, and/or have to break out before reaching the end. Unless the workpiece is large enough to protects the cutters as far as practicable. A solidly fixed back and/or front stop shall also be used.

The jig shall permit the workpiece to be located quickly and accurately and to be held firmly in position. The most convenient means of holding the workpiece is to use manually operated quick acting clamps which operate with either a toggle or a cam action. Back and/or front stops fixed to the fence or table allow for greater control of the jig and a lead in and out may be provided by means of a template on the jig.

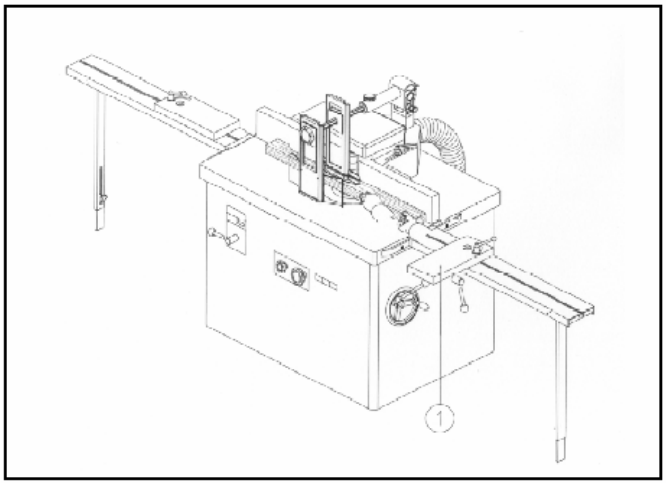

Stopped straight work

Fig. 1.1.9

11. Curved work

A jig shall be used for all curved work unless the nature of the operation makes it impracticable; that is where the workpiece is so large that the addition of a jig would make the job unmanageable, or where the workpiece is so small, or so complicated that it cannot be held securely in a jig.

Please buy the safety guard for curved work with a profession manufactures which products **are in compliance with of relevant (CE) regulations** , such as Suva (French), Aigner (German) etc.

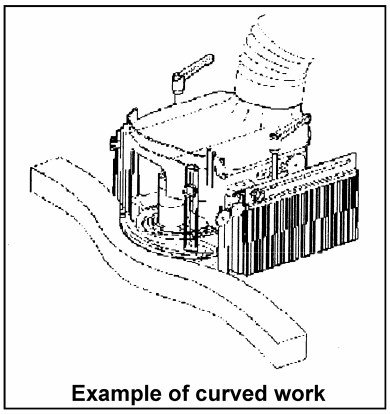

Fig. 1.1.10

12. Bevel cutting

Where bevel cutting is done firm support shall be provided either by a miter gauge or by an adjustable false fence. Push sticks shall be used at the end of the cut.

13. Glass bead work

This machine is not designed / equipped with glass bead unit for glass bead work. Please do not install the special equipment for glass bead work.

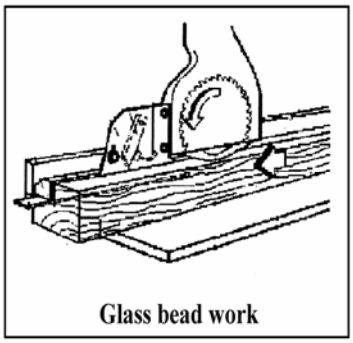

Fig. 1.1.11

14. Other work

Where other work is produced on a machine i.e. tenon or comb joints, proprietary jigs or work holders must be used to reduce the risk of accident.
Use of safety appliances
The following appliances may be used to assist the operator when machining:
-jigs or work holder
-push sticks
-demountable power feed
-extension tables
-lead in guide

15. Noise reduction

a) The condition of the tools are important to minimize noise levels.

b) The material and positioning of guards shall be such to reduce noise levels.

c) Selection of speed tooling shall be used to reduce the noise levels.

d) Use of personal protection equipment is not an alternative to the above.

1.7 WARNING LABLES

This machine has warning labels attached on it as shown below to ensure proper and safe operation. These warning labes are very important, so do not damage or remove them. If damage or lost, contact your dealer or us and quote the warning label identification rumber for servicing. Please refer to Fig.1.9 and Fig.1.10.

Label No. Remarks

1. Safety rules
2. Never try to contact a turning spindle and cutters
3. Ear and eye protection
4. Optimum speed range

6. Speed chart (inside of the cabinet door)
7. Open door delay

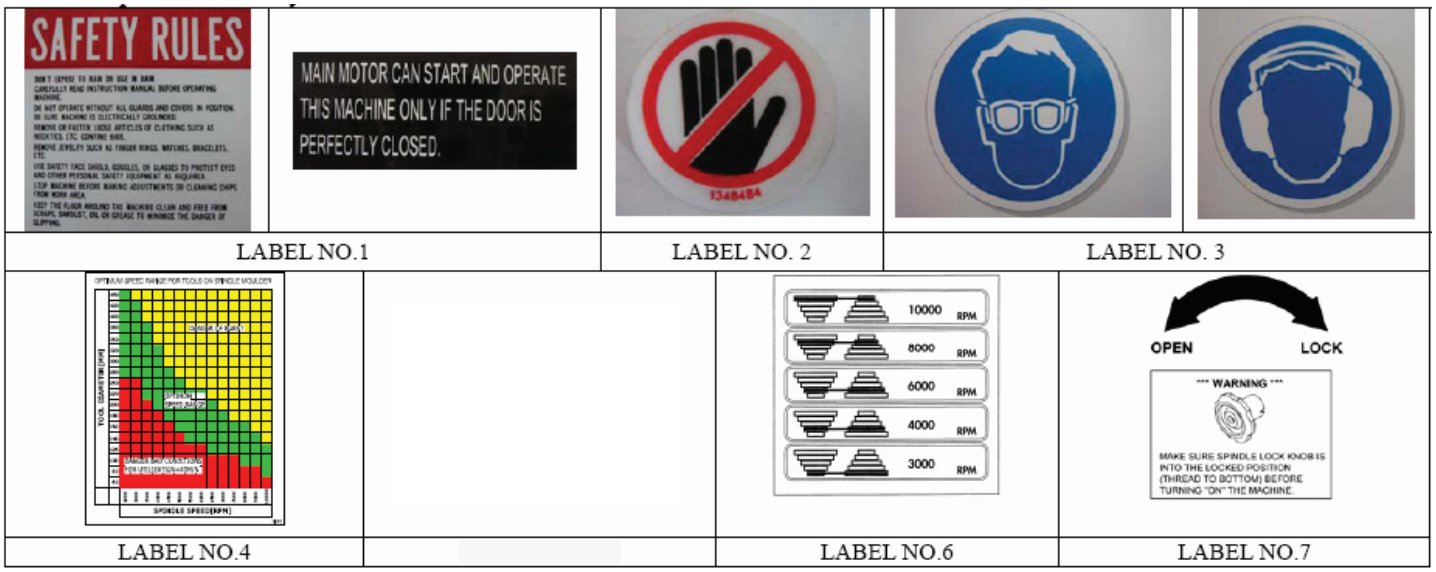

8. CE MARK

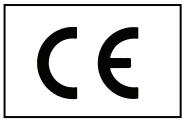

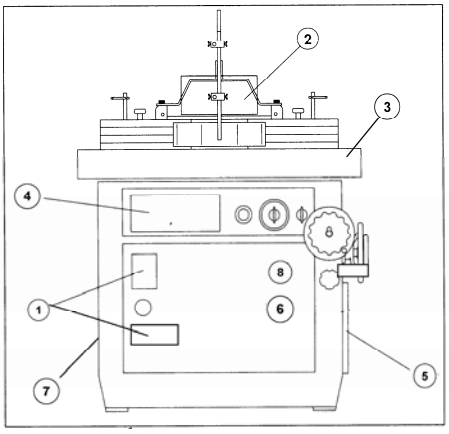

Fig. 1.2

1.8 DIMENSIONS FOR SPINDLE AND TOOLS

Tool shall comply to EN 847-1:2005 and/or EN 847-2:2001.

Acceptable dimension for spindles and tools are given in Fig. 1.3

spindle diameter d d_1 g^6		Maximum useable length of spindle from the shoulder l_1		Maximum tool diameter (that can be mounted in the guard) d_2	
		Single piece spindle	Removable spindle	Shaping	Tenoning
30[b]	mm	140	140	250	300
40[c]	mm	180	160	250	350
50	mm	220	160	275	400
b	values given for d1=30 mm are also valid for spindle diameters larger than 30mm and smaller than 40 mm.				
c	values given for d1=40 mm are also valid for spindle diameters larger than 40mm and smaller than 50 mm.				

Fig. 1.3

1.9 RECOMMENDED WORK AREA

Below shows the work area needed for maintenance of the electrical panel located at the rear side of the machine as well work area of pneumatic panel which is located at the side of the machine.

Straight work station

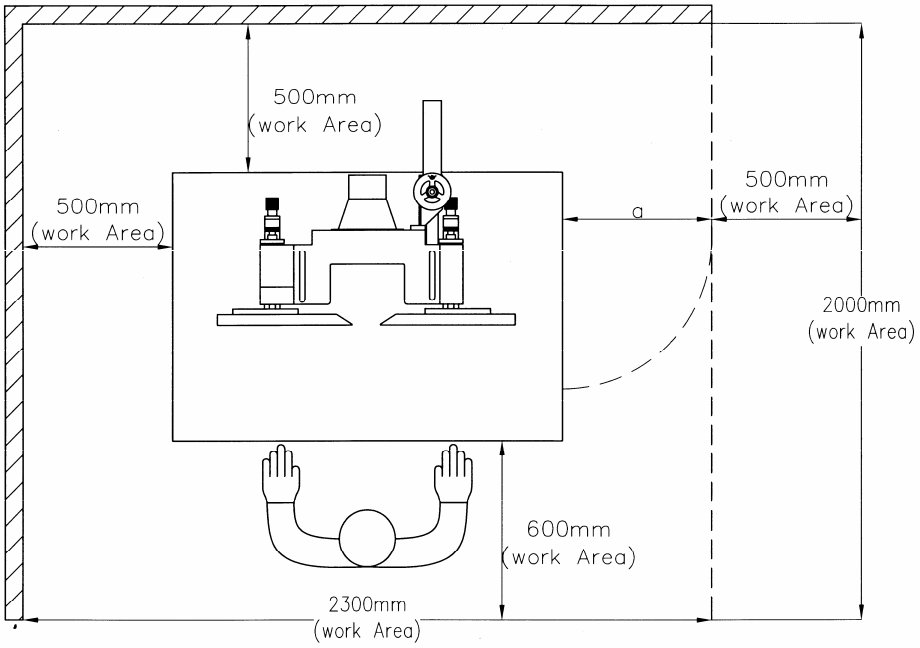

Tenoning work station

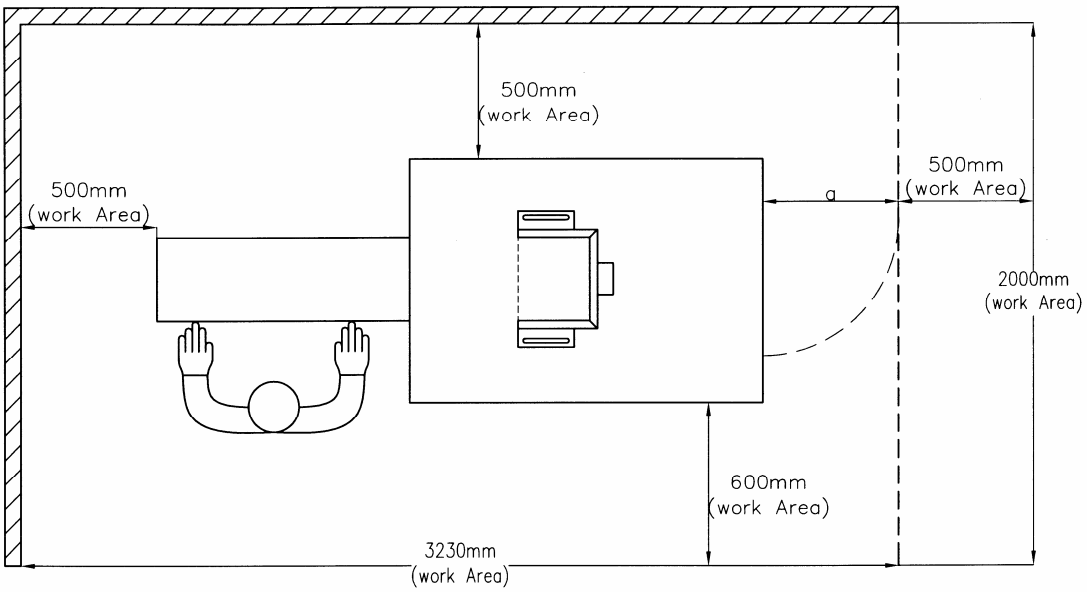

CHAPTER 2. INSTALLATION

2.1 UNPACKING AND CLEANUP

To ensure maximum performance from your spindle shaper, clean it properly; and install it accurately before use.

As soon as you receive the spindle shaper, we recommend you follow these procedures:

1. Inspect packing crate for damage in transit. Record damage, and report it immediately to shipper.
2. Open crate and check that machine arrived in good condition. If not, let your industrial distributor know immediately.
3. Before lifting machine, remove all foot bolts locking it to its shipping base.
4. Transport machine to location with a hand truck or dolly.
5. Do not use solvents on plastic parts and electric cord; solvents dissolve or damage plastic and electric cord.

Transportation after Unpacking: crane or fork lift recommended for transportation

The machine can be lifted by using a crane placing the cables as shown in Fig.2.1 or with a fork lift inserting the forks as close as possible to the supports. Refer to Fig.2.2.

The hoist and sling/cables must be with capability of withstanding machine weight. Their cables should be capable of lifting 2tons. Two ends of sling should be at an angle of under 60 degrees.

Fork lift, two forks, should be capable of lifting 2 tons. To move the machine must slow down, especially pay attention to it's balance.

The machine is lifted by crane or removed by fork lift and the removal of pallet packing is achieved.

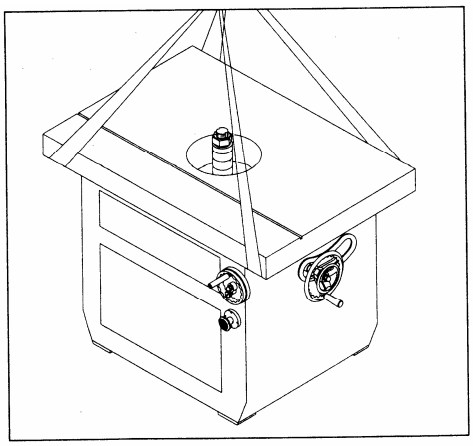

Fig. 2.1

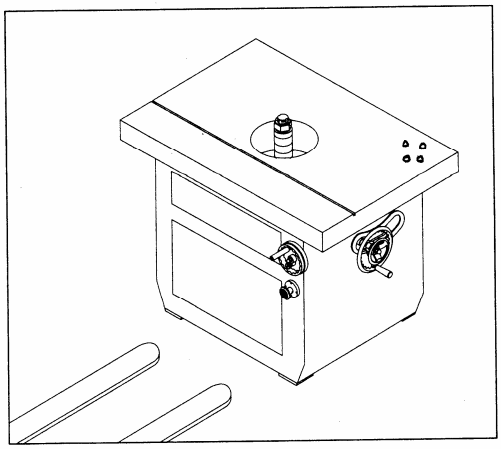

Fig. 2.2

2.2 Installation and leveling

The spindle moulder comes assembled except interchangeable spindle, fence assembly, dust chute, miter gauge, clamp attachment and some other loose items.

Carefully remove machine from wooden shipping skid. For best shaping performance, locate spindle moulder on a soild, level foundation.

With machine in position, check table surface left to right and front to back with a machine level.

If necessary, place metal shims under the corners of the machine to insure that the machine is level.

Check to be sure that all four corners of the machine are supported and fasten the machine to the floor using foot (leveling) screws. Re-check to make sure table is level and re-adjust if necessary.

2.3 Grounding information and power connections

Before connecting your spindle moulder to the power source, be sure that the electric current of the power source is of the same characteristics as the electrical system supplied with your machine.

Machine overcurrent protective device and power cable to be prepared by the user site:

	SS-510 1PH			SS-510 3PH			SS-511 1PH	SS-511/512/513 3PH			PS-515/PS-515plus 3PH		
KW (spindle motor)	1.5	2.2	3	1.5	2.2	3	3.75	3.75	5.5	7.5	3.75	5.5	7.5
Mains Fuse A	16	25	32	6	8	10	40	16	16	20	16	16	20
PVC Power cable mm^2 /PE	3.5	5.5	5.5	2	2	2	8	3.5	3.5	5.5	3.5	3.5	5.5

To connect power to the machine, proceed as follows:

1. Remove two screws (A) Fig.2.3, and remove terminal strip cover (B).
2. Remove clear plastic insulator (C) Fig.2.4 that covers the terminals.
3. Insert power line through opening (D) Fig.2.3, of terminal strip box (G).
4. And the wire bicolour combination GREEN-AND- YELLOW to PE-terminal.
5. Reassemble the clear plastic insulator that was removed in STEP 2 and the terminal strip cover that was removed in STEP 1.

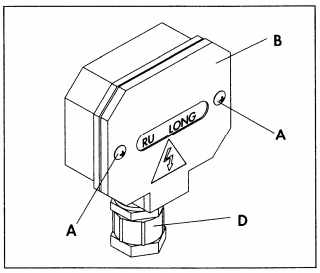

Fig. 2.3

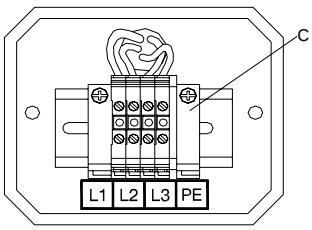

Fig. 2.4

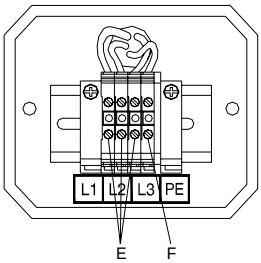

Fig. 2.5

《**CAUTION**》The best work conditions for the machine is to furnish the right tension indicated on the motor plate, however it can adapt itself to tensions superior or inferior in a tolerance field of +/-5%.(e.g. a machine with a work tension of 380 volts has a tolerance field ranging from 360 to 400 volts).

The necessary wiring from the starter to the power source should be completed by a competent electrician.

For personal safety, this machine must be properly grounded.
The spindle moulder must be grounded while in use to protect the operator from electric shock.
Never connect the yellow green wire to a live terminal.
《**WARNING**》 After connecting this machine to power source, the terminal box is still electrified even while the power switch is shut off.
When wiring is completed, tape all power box joints to keep out dust.

Make sure the direction of the shafts rotation is correct by starting the machine as described in its appropriate paragraph. If the direction is wrong, please check the power phase sequence again.

《**CAUTION**》
Voltage Steady state voltage: 0,9 to 1,1 of nominal voltage.
Frequency 0,99 to 1,01 of nominal frequency continuously;
0,98 to 1,02 short time.
Harmonics Harmonic distortion not exceeding 10 % of the total r.m.s. voltage between live conductors for the sum of the 2nd through to the 5th harmonic.
Voltage interruption Supply interrupted or at zero voltage for not more than 3 ms at any random time in the supply cycle with more than 1 s between successive interruptions.
Voltage dips Voltage dips not exceeding 20 % of the peak voltage of the supply for more than one cycle with more than 1 s between successive dips.
No relevant statement provided in the manual:
Environment Requirement
The minimum requirement for all electrical equipment is correct operation between air temperature of +5°C and +45°C.
Electrical equipment is capable of operating correctly when the relative humidity does not exceeding 50% at a maximum temperature of +45°C.
Electrical equipment is capable of operating correctly at altitude up to 1000 m.
Electrical equipment is designed to withstand to protected against the effects of transportation, and storage temperature within a range of -25°C to +55°C and for short periods not exceeding 24h at up to + 70°C.
Avoid exposing to vibration environment.
Avoid exposing to direct sunlight or heat rays.
Have to connect to the factory grounding system correctly
Away from electric magnetic interference source sites, such welding, discharge machine.

CHAPTER 3. USE-ADJUSTMENT

3.1 Control Unit

FOR 5-SPEED SPINDLE MOULDER

A control panel is provided with your spindle moulder as shown in Fig. 3.1. & Fig. 3.2.

A. power indicator (CE)
B. on-off switch
C. forward/reverse switch
D. start indicator (CE)
E. emergency stop
F. switch for unlock the motor brake(on request)
G. forward indicator (CE)
H. speed indicator (CE)

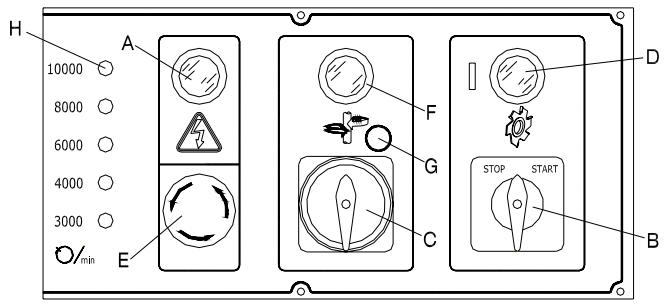

Fig. 3-1

FOR 3-SPEED SPINDLE MOULDER

An on-off switch and a forward/reverse switch are provided with the machine and should be used as follows to operate your machine.

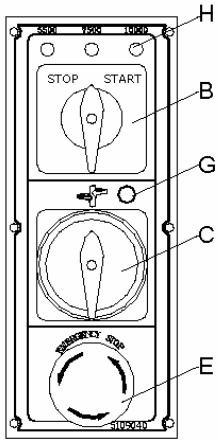

Fig. 3-2

3.2 Electrical Controls

The control unit should be used as the following to operate your machine:

1. Make certain the spindle lock is disengaged as explained in the section "SPINDLE LOCK" and that the cabinet door is in the closed position.

2. Rotate the forward/reverse switch (C) Fig.3.1 to either the forward rotation, or reverse rotation.
   Rotate the start switch (B) to the right to start the machine. Switch (B) is a magnetic switch and as soon as the machine is started the switch will return to the center position as shown.
3. To stop the machine, push the mushroom shaped stop button (E), or turn the start/stop switch (B) to the left, or simply step on brake pedal (B) Fig.3.12, to stop the machine in seconds if this device is available.

To reverse the rotation of the spindle simply shut off the motor; then rotate the forward/reverse switch after the spindle stop completely. For CE machine, a main switch is mounted on the right side of the machine frame. Turning the switch to zero, indicate so with a sign and padlock it before servicing. The electrical cabinet door is lockable. Always close and lock this door except for service.

《**WARNING**》 Never attempt to reverse the rotation of the spindle with the motor/spindle running. Remember！

《**CAUTION**》 Do not use the for/rev. switch to stop the machine or it will damage the electrical controls. Use stop push button or brake pedal for normal stop.

《**WARNING**》 Open the electrical cabinet door only while the main switch is shut off, or it may result in electric shock.

3.3 SPEED CHANGE AND BELT ADJUSTMENT

a) the relationship between tool diameter, cutting length and max. rotational speed

Since the max. safe spindle speed will depend on:

a) The spindle diameter
b) Te usable length of the spindle
c) The length of cut
d) The tool cutting diameter

The following charts can be used to determine the max. spindle speed for various tool cutting diameters given the values of d, l, and b.

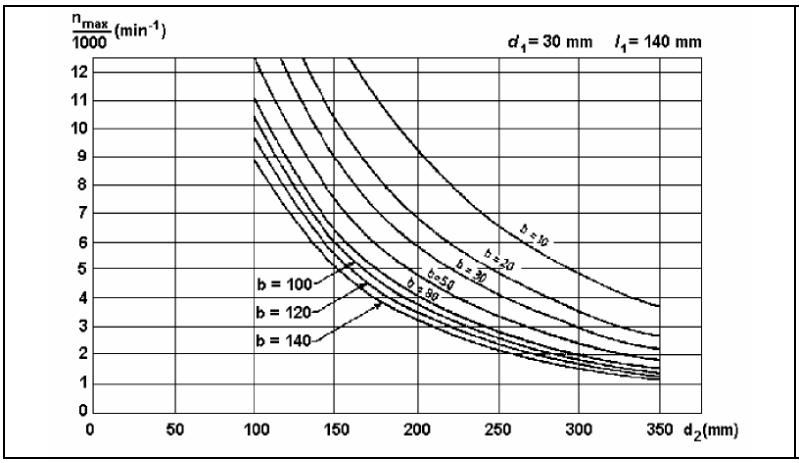

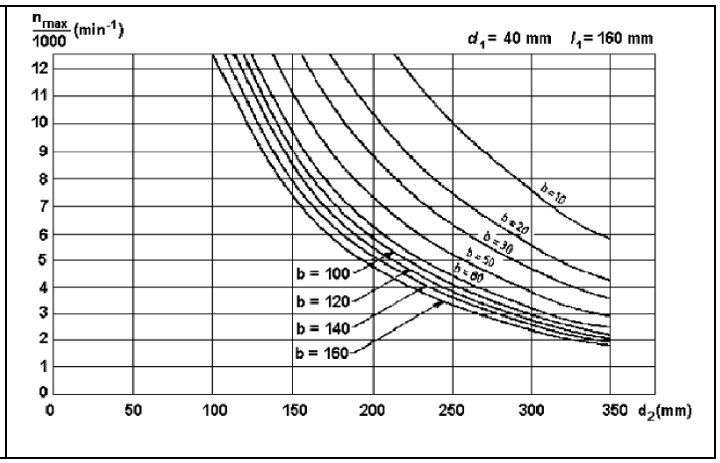

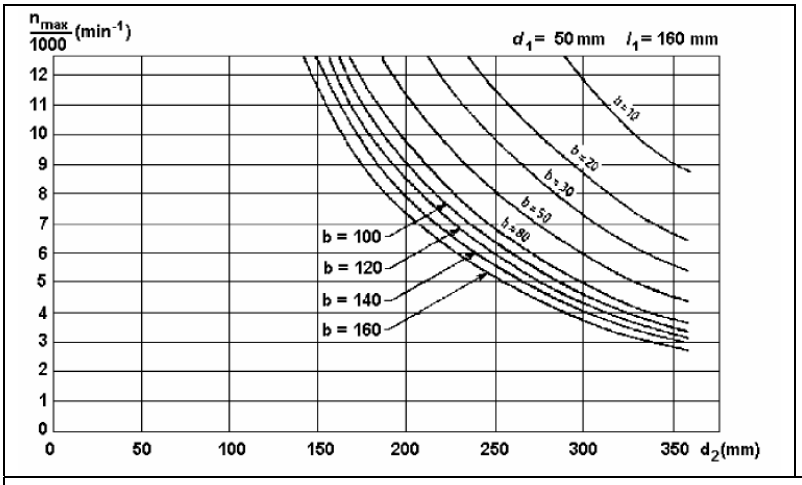

*d*1: spindle diameter
*d*2: tool cutting diameter
b: length of cut
*l*1:maximum useable length of spindle

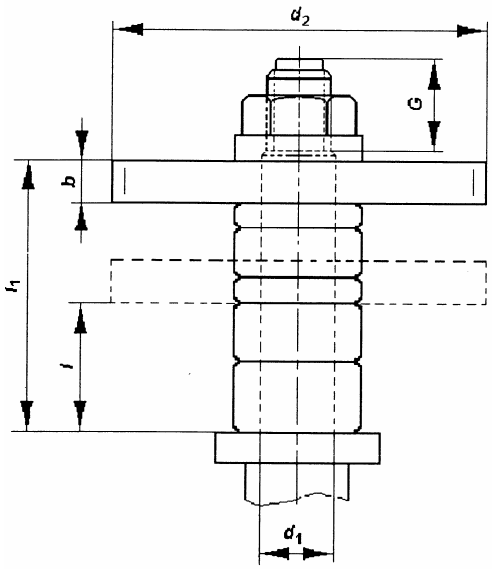

b) FOR 5-SPEED SPINDLE MOULDER

Your machine is supplied with a 5-step motor pulley and a 5-step spindle pulley that provides spindle speeds of 3000, 4000, 6000, 8000 and 10000 RPM as standard; or 1500, 3500, 5500, 7500, 9000 RPM as alternative for some specific models.

A large speed chart Fig. 3.3, is located on the inside of the cabinet door for easy reference of the belt position on the pulleys for the five speeds available.

Fig.3.3

Check machine speed setting before operating. Make sure cutter meets or exceeds speed rating of tool. In the diagram Fig.3.4 a concrete example of choosing a speed in function to the diameter of the utensil, and the most opportune peripheral speed for the type of material to be worked on.

Guide values for cutting speed

Material	Cutter HS [m s^{-1}]	Cutter HW [m s^{-1}]
Softwood	50-80	60-90
Hardwood	40-60	50-80
Chipboard	—	60-80
Coreboard	—	60-80
Hard fibreboard	—	40-60
Plastic-coated board	—	40-60

Example:

Cutter: 160 mm diameter, v_c=76m s^{-1}→n=9000 min^{-1}

Cutter speed formula:

v= (D×π×N) / (60×1000)

D: Tool diameter (mm)

N: Tool spindle speed (rpm)

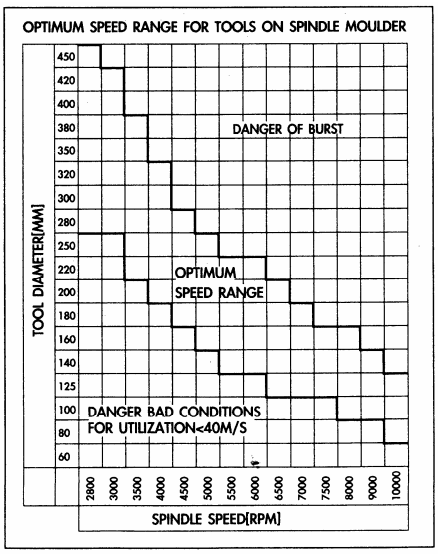

Fig. 3.4

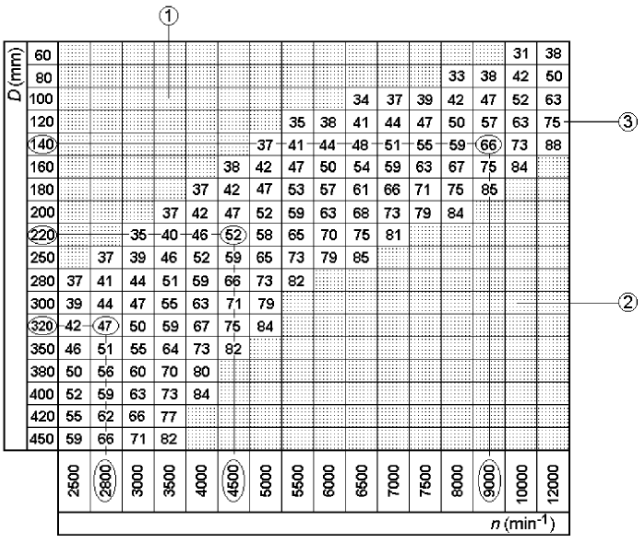

Fig.3.4.1

The cutting speed range m/sec (lower and upper limits) is selected according to the tool diameter (mm) D (left vertical axis in the above chart) and the tool spindle speed N min^{-1} (bottom horizontal axis in the above chart) to avoid the risk of kickback or tool damage respectively.

Spindle dia.	Tool length
30 mm	140
40 mm	160
50mm	160

1. hazard-bad machining conditions
2. bursting hazard
3. recommended spindle tool speed

D tool diameter

N tool spindle speed

The cutting speed shall always exceed 40 m/s to lessen kickback risk but shall never exceed 70 m/s to lessen the risk of tool damage.

To change the speed and adjust the proper belt tension, proceed as follows:

1. Disconnect machine from the power source.
2. Open the door guard.

《**NOTE**》 A limit switch is provided which prevents the machine from being turned on when the cabinet door is in the open position. (CE)

《**CAUTION**》 The normal stop (B) Fig. 3.1, should not be replaced by this above-mentioned limit switch inside the door guard.

3. Move belt tension lever (A) Fig. 3.5, to the right as shown, to loosen belt tension. The belt (B) can then be moved to the desired steps of the motor pulley (C) and spindle pulley (D), while at the same time, rotate knob (A) Fig. 3.5.1 to slide speed bar (B) up or down so that the belt will be positioned in the cut-out in speed bar if this device is available on your machine.

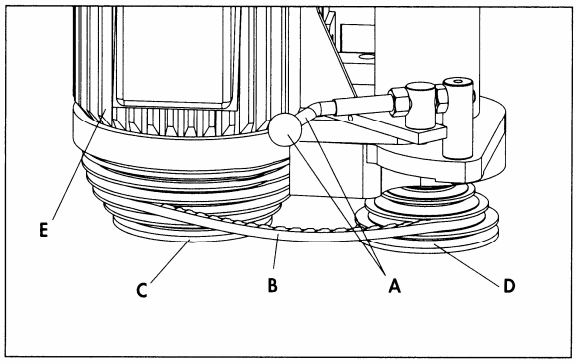

Fig. 3.5

4. After the belt (B) Fig.3.6, is positioned on the desired steps of the motor pulley (C) and spindle pulley (D), move tension lever (A) to the left to apply belt tension as shown.
5. Close the door guard.

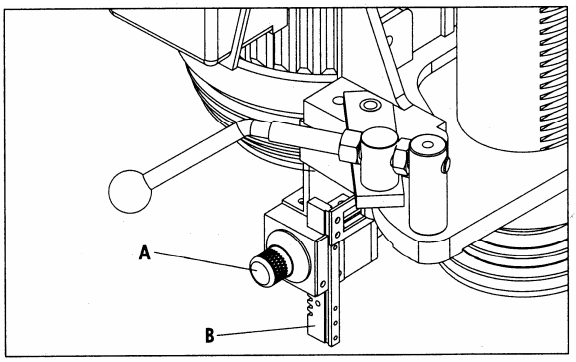

Fig.3.5.1

During the first work phase, the belt will settle and thus a reduction of the tension. Turn the two nuts (E&F) Fig.3.6, to obtain the best tension of the belt.

Tension is checked by pressing the center of the belt span with a force of 3kg; tension is correct when a 5mm deflection is observed.

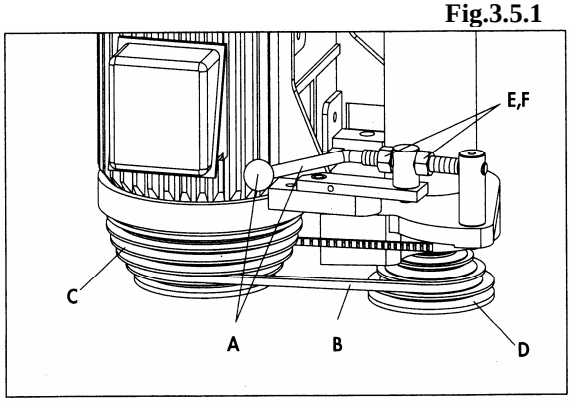

Fig. 3.6

For 3-SPEED SPINDLE MOULDER

The 3-speed spindle moulder is supplied with a 3-step motor pulley and a 3-step spindle pulley that provides spindle speeds of 5500, 7500 and 10000 RPM.

A speed chart Fig.3.7 is located in the front of the machine for easy reference of the belt position on the pulleys for three speeds available. To change speeds, proceed as follows:

1. Shut off the power and open the cabinet door.

《**NOTE**》 A limit switch is provided which prevents the machine from being turned on when the cabinet door is in the open position.

2. Loosen lock lever (A) Fig.3.8, then move tension lever (B), to the left to loosen belt tension.
   The belt (C) can then be moved to the desired steps of the motor pulley (D) and spindle pulley (E).
3. After the belt is positioned on the desired steps of the motor pulley and spindle pulley, move tension lever (B) to the right to apply belt tension and tighten lock lever (A).

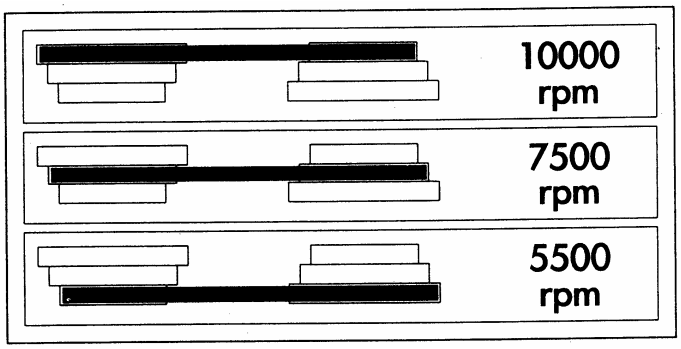

Fig. 3.7

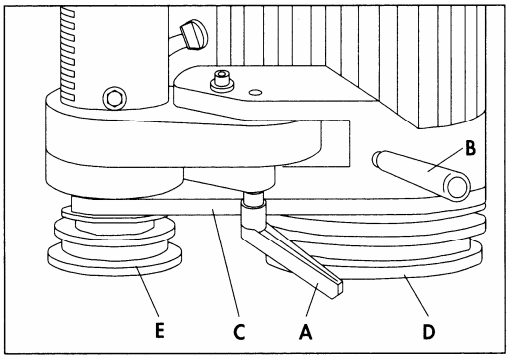

Fig. 3.8

3.4 Spindle lock

A spindle lock is provided with your machine in on of the following types to assist you when changing spindle or installing and removing cutters.

《**CAUTION**》 Spindle lock is provided with your machine in one of the following types to assist you when changing spindle or installing and removing cutters.

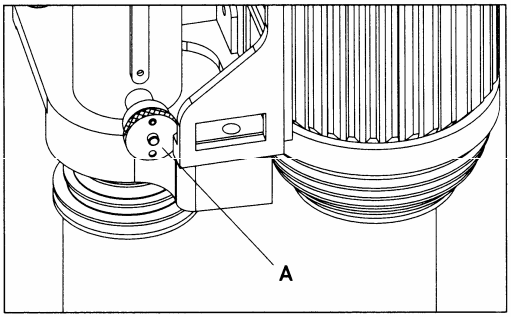

Fig. 3.9

BASIC TYPE

1. Open rear cover of the machine. Rotate lock knob (A) Fig. 3.9, until the hole on the knob engages the pin on the other end of the knob. The knob (A) will then be latched in “lock spindle”.
2. Close rear door.

STANDARD TYPE A

1. To position the spindle in “loose spindle” (where the spindle will rotate freely), pull out knob (A) Fig.3.10, and turn it clockwise. The knob (A) will then be latched in “loose spindle”. Fig.3.10 illustrated the knob (A) pulled out in the loose spindle position.
2. To engage the spindle lock, turn knob (A) Fig.3.11, counterclockwise and push in to the locked position, as shown in Fig.3.11.

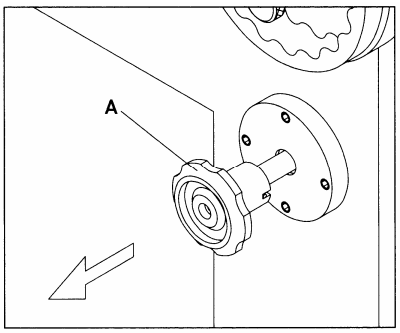

Fig. 3.10

STANDARD TYPE B

1. To position the spindle in “loose spindle (where the spindle will rotate freely), turn knob (A) Fig. 3.10, and push in to the loose position.
2. To engage the spindle lock, pull out knob (A) and turn spindle by hand till the spindle is locked, and then turn knob. The knob will then be latched in “locked spindle”.

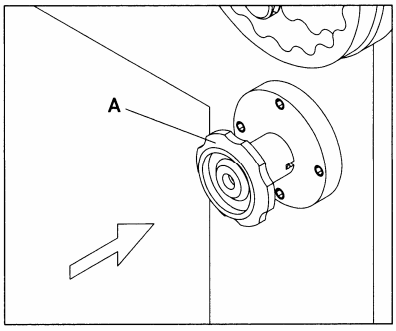

Fig. 3.11

《**CAUTION**》Make sure spindle lock knob is in the loose position before turning “ON” the machine.

3.5 INTERCHANGEABLE SPINDLE INSTALLATION AND REPLACEMENT

One of the features of this machine is that it can replace the different sizes of the spindle and uses router bits. To install the spindle, proceed as follows:

FOR INTERCHANGEABLE SPINDLE WITH DRAW BAR

1. Disconnect the machine from the power source and remove the table rings.
2. Turn the spindle raising and lowering handwheel and raise the main shaft all the way to the top.
3. The taper of the interchangeable spindle and the internal taper of the shaft must be cleaned thoroughly using a cloth moistened with kerosene or mineral spirits. Do not use gasoline or lacquer thinner for this purpose.

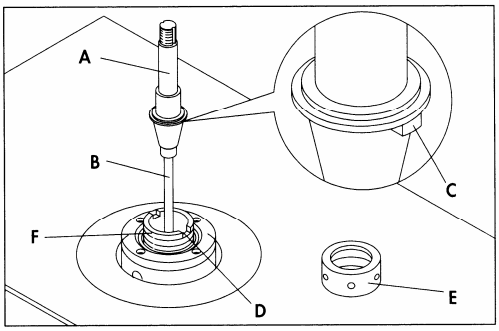

Fig. 3.12

4. Thread the short threaded end of the draw bar (B) Fig. 3.12, into the threaded hole in the bottom of the interchangeable spindle (A) and remove the two lock nuts and special bevel washer from the other end of the draw bar (B).

5. Very carefully insert the draw bar (B) and spindle (A) Fig.3.12, down through the shaft as shown. Make sure the tang (C), on the spindle, is engaged with the notch (D), and thread spindle nut (E) onto threads (F).
6. Engage spindle lock as explained in the section "SPINDLE LOCK".
7. Using the special spanner wrench (G) Fig.3.13 tighten spindle nut (E) as shown.
8. Open the cabinet door and assemble the special level washer (H) to the bottom of the draw bar (B), as shown in Fig.3.14. The bevel washer (H) was removed from the draw bar in STEP 4.
9. Assemble and securely tighten the two lock nuts (I) Fig. 3.14 as shown. The two lock nuts (I) were removed from the draw bar (B) in STEP 4.
10. Disengage the spindle lock.

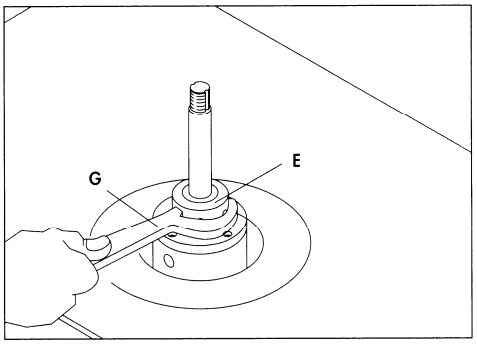

Fig. 3.13

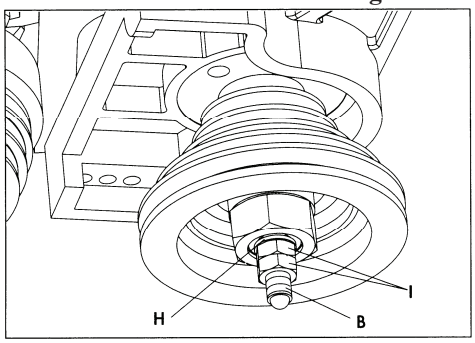

Fig. 3.14

FOR INTERCHANGEABLE SPINDLE WITHOUT DRAW BAR

1. Disconnect the machine from the power source and remove the table rings.
2. Turn the spindle raising and lowering handwheel and raise the main shaft all the way to the top.
3. Engage spindle lock as explained in the section "SPINDLE LOCK".
4. The taper of the interchangeable spindle and the internal taper of the shaft must be cleaned thoroughly using a cloth moistened with kerosene or mineral spirits. Do not use gasoline or lacquer thinner for this purpose.

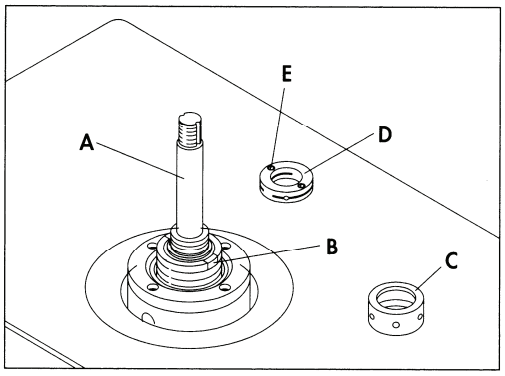

Fig.3.15

5. Very carefully insert the spindle (A) Fig.3.15 to the hole of main shaft. Make sure the tang (B) on the spindle is engaged with the notch, then lock it with nut (C) , and lock nut (D) in reverse direction.
6. At the upper part of the lock nut (D) there are two screws (E). Turn the two screws (E) by pressing the threads of the nuts (D) tightly in order to prevent the spindle from loosening when it is used in the forward and reverse directions.

To take off spindle:

1. Before lock nut (D) is loosened, two screws (E) must be loosened first.
2. The lock nut (D) can not be taken away alone. Only loosen the lock nut by turning twice only, then loosen the nut (C) until the spindle is taken off.

3.6 SPINDLE VERTICAL TRAVEL ADJUSTMENT

FOR 5-SPEED SPINDLE MOULDER

TYPE A

1. Loosen handwheel lock (A) Fig. 3.16, before making adjustment of spindle height.
2. To raise the spindle, turn handwheel (B) counterclockwise and to lower the spindle, turn handwheel (B) clockwise.
3. Tigten handwheel lock (A) when desired spindle height is obtained.
4. One complete turn of the handwheel moves the spindle up or down by 1 or 2.5mm indicated on the machine frame.

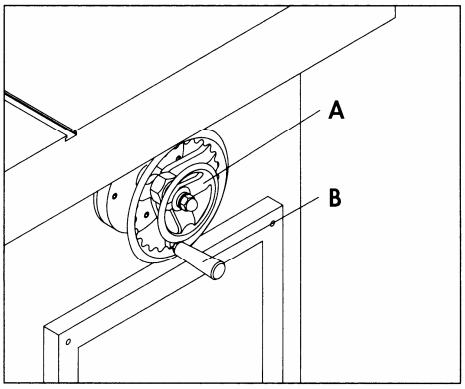

Fig. 3.16

TYPE B

1. Loosen locking lever (A) and knob (b) Fig. 3.17, before making adjustment of spindle height.
2. To raise the spindle, turn handwheel (C) counterclockwise and to lower the spindle, turn handwheel (C) clockwise.
3. Tigten knob (B) and locking lever (A) when desired spindle height is obtained.
4. The dial indicator (D) is for the use of micro-adjustment of spindle.
5. One complete turn of the handwheel moves the spindle up or down by 1 or 2.5mm indicated on the machine frame.

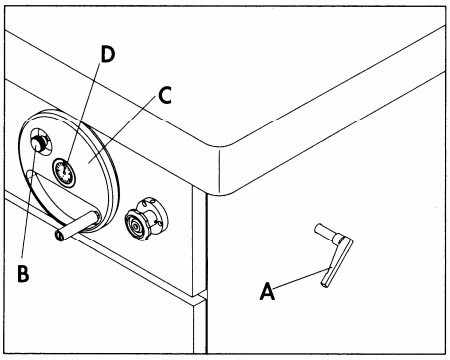

Fig.3.17

TYPE C

1. Loosen the locking handle (A) and knob (B) Fig. 3.18.
2. Turn the handwheel (C) and adjust the height to the required position.
3. Lock the knob (B) and locking handle (A).
4. One complete turn of the handwheel moves the spindle up or down by 1mm.

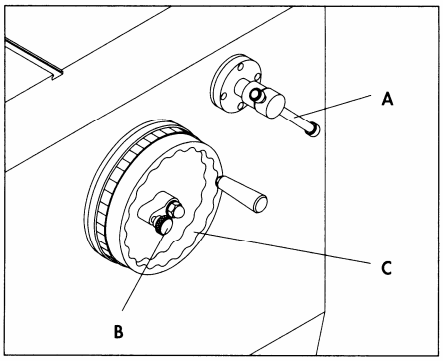

Fig.3.18

Digital read-out (A) Fig. 3.19, for spindle height is available for some specific models.

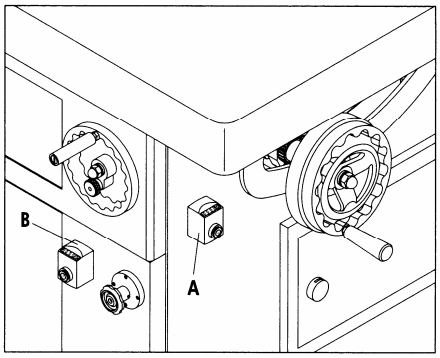

Fig.3.19

FOR 3-SPEED SPINDLE MOULDER

1. Loosen handwheel lock (a) Fig. 3.20, before making adjustment of spindle height.
2. To raise the spindle, turn handwheel (B) clockwise and lower the spindle, turn handwheel (B) counterclockwise.
3. Tighten handwheel lock (A) when desired spindle height is obtained.
4. One complete turn of the handwheel moves the spindle up or down by 2mm.

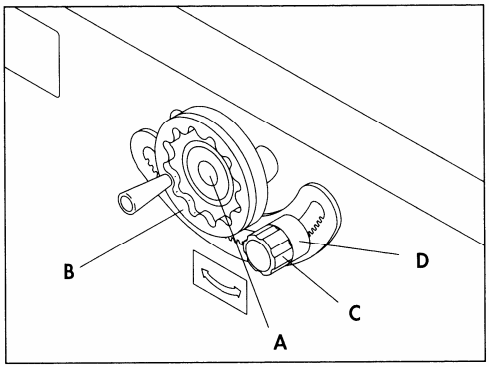

Fig. 3.20

《**WARNIN**G》Final height setting of the cutter should always be from the bottom to the up position.

3.7 SPINDLE TILTING ADJUSTMENT

Stop the machine before tilting the spindle. Unlock the spindle. Be sure that the cutter does not touch the table and the fences.

FOR 5-SPEED SPINDLE MOULDER

Forward tilt type

The dial indicator of tilting degree indicates the figures from -5 or -10 to 45 degree. When adjust the tilt of spindle:

1. Replace the table rings and install the one for use with tilting spindle.
2. Loose the knob (B) Fig. 3.21 on the handwheel (A).
3. Loose the two locking handles (C) on the both sides of machine.
4. Turn the handwheel (A) to the required tilting degree and position.
5. Tighten the knob (B) and locking handles (C).

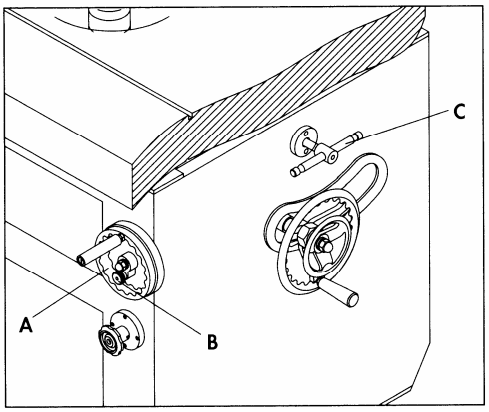

Digital read-out for spindle tilting degree is available for some specific models.

Fig.3.21

Backward tilt type

The dial indicator of tilting degree indicates the figures from 10 to -45 degree. When adjust the tilt of spindle:

1. Replace the table rings and install the one for use with tilting spindle.
2. Loose the knob (C) Fig. 3.21.1 on the handwheel (B).

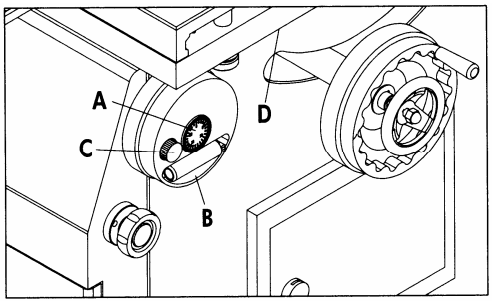

Fig. 3.21.1

3. Loose the locking handles (D) on the right side of machine.
4. Turn the handwheel (B) to the required tilting degree and position.
   A dial indicator showing existing tilting degree is provided for your convenient adjustment.
5. Tighten the knob (C) and locking handles (D).

FOR 3-SPEED SPINDLE MOULDER

The scale of tilting degree indicates the figures from -5 to 30 degree. When adjust the tilt of spindle:

1. Replace the table rings and install the one for use with tilting spindle.
2. Loose the knob (C) Fig. 3.20.
3. Turn the knob (D) to the required tilting degree and position.
4. Tighten the knob (C).

3.8 ASSEMBLING CUTTERS TO SPINDLE

Before changing the tool, the electricity power should be shut off.

1. Disconnect the machine from the power source and engage the spindle lock as explained in the section "SPINDLE LOCK".
2. Place the cutter (A) Fig. 3.22, and desired spindle rings (B) on the spindle as shown.
3. Tighten nut (D) using the wrench supplied and disengage spindle lock.

Or tighten safety nut w/washer (E) using the wrench supplied and disengages spindle lock.

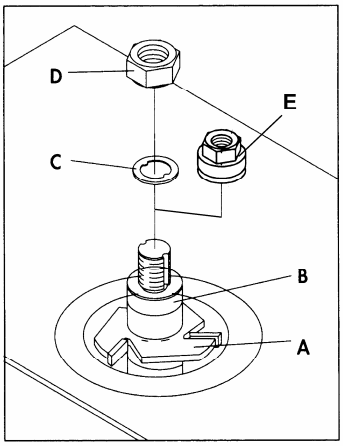

Fig.3.22

《**WARNIN**G》 Whenever possible, the cutter should be position on the spindle in such a way that the cut us being performed from under the surface of the workpiece.

《**WARNIN**G》 Always place the "keyed" washer (C) Fig. 3.22, on spindle before threading on nut (D).The "keyed" washer (C) prevents the nut (D), from loosening when spindle turns counterclockwise.

《**WARNIN**G》 After installing and replacing cutter please check one more time carefully. Be sure that the direction of cutter is correct and the keyed washer, spindle rings are directly under spindle nut and spindle nut is tightened securely.

3.9 TABLE RINGS

A set of table rings is supplied with your machine and can be removed individually for use with various size cutters.

A table ring for use with tilting spindle is also available.

3.10 ASSEMBLING AND INSTALLING FENCE AND DUST CHUTE

ASSEMBLING FENCE

1. Place fence body (A) Fig.3.23 on the table. Fasten bar (C) to the front of the fence half using the locking lever (B) and washer. Assemble the remaining bar to the fence half in the same manner.

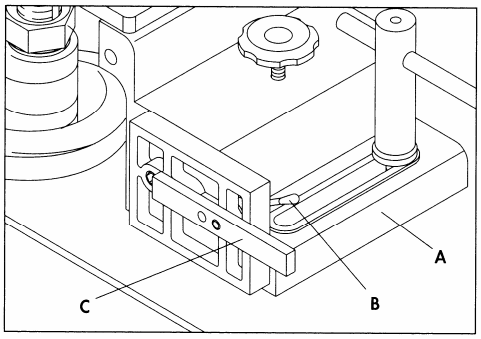

《**NOTE**》 Locking levers (B) are spring-loaded and can be repositioned by pulling out the handle and repositioning it on the nut located underneath the hub of the handle.

Fig.3.23

2. Locate the two fence locking handles (D) Fig. 3.24 and washers, and fasten fence body (A) to one of the two sets of holes located on the machine table.
3. Loosen locking lever (B) Fig.3.23, and slide rear of fence half (E) Fig. 3.24 onto locking bar (C) Fig, 3.23. Assemble remaining fence half in the same manner. Then tighten locking lever (B).
4. Assemble top cover (F) Fig.3.24, to top of fence body using the two locking knobs (G) and washers.

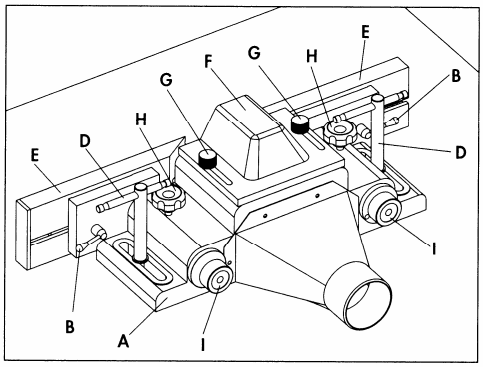

Fig.3.24

ASSEMBLING GUARDS TO FENCE BODY

1. Assemble spring guard (A) Fig.3.25, hold-down (D) and clear plastic guard (C) to mounting rod (D) located on top of fence cover or fence body using rod (E) and clamps.
2. The spring guard (fence pressure pad) (A), hold-down (table pressure pad) (B) and clear (C) can be flipped up out of the way when not in use or when making adjustments.

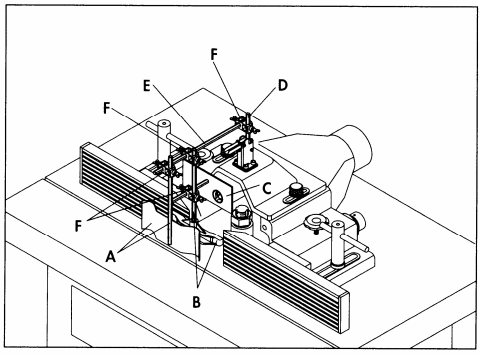

Fig.3.25

Realignment of fence plates parallel:

Placing a solid ruler along the fixed fence plate, adjust the movable fence plate to contact the fixed fence plate.

FENCE CONTROLS AND ADJUSTMENTS

《**WARNIING**》 The fence halves (E) Fig3.24 should be adjusted endwise so the opening at the spindle is never more than is required to clear the cutter.

1. To adjust the fence halves (E) Fig.3.24 endwise, loosen the two fence locking levers, slide the fence halves to the required positions and tighten locking levers (B).

2. Each fence half (E) can be moved independently, in o out, depending on the type of shaping operation that is being performed. To move the fence halves in or out, loosen one of the locking knobs (H) and turn one of the adjusting knobs (I) until the correct setting is obtained and tighten locking knob (H).
3. The complete fence assembly can be rapidly positioned on the table by loosening two locking handles (D), moving the fence assembly to the desired position and tightening the two locking handles (D).

ASSEMBLING DUST CHUTE

For 5-speed spindle moulder

Assemble dust chute (A) Fig.3.26. to rear of machine table, using the two screws and washers (B) as shown.

Air suction (A) for table: 101.6 mm (4”)

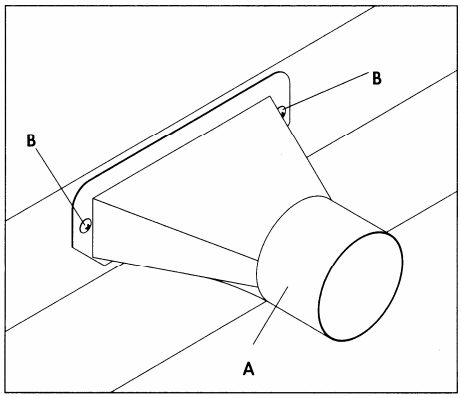

Fig.3.26

Assemble dust chute (A) Fig.3.26.1 for safety fence assembly, using the two screws and washers (B) as shown.

Air suction (A) for safety fence assy.

SS-510/511series: 101.6mm (4”)

SS-512～PS-515 series : 127 mm (5”)

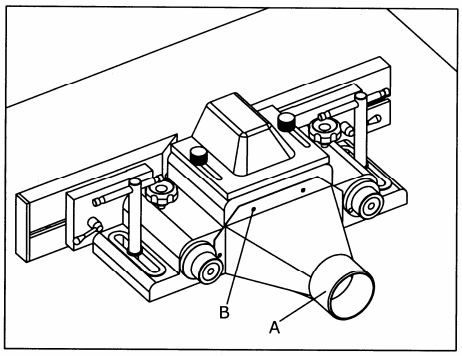

Fig. 3.26.1

For 3-speed spindle moulder

Two 4” diameter dust chutes are provided to allow you to connect your machine to a dust collector or central dust collection system.

One dust chute opening is provided on the fence and another dust chute opening (A) Fig.3.27 is provided on the machine frame.

Air suction (A): 101.6 mm (4”)

《**WARNING**》 The suction system should have a flow rate with a speed of at least 4900 F/M to 5900 F/M (25M/S to 30 M/S).
Air delivery: 45～50 M^3/Min

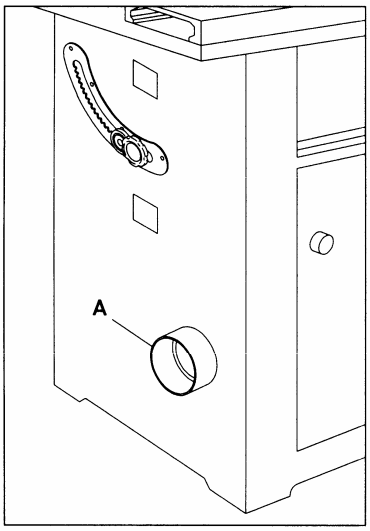

Fig. 3.27

3.11 ASSEMBLING MITER GAUGE AND CLAMP

ASSEMBLING MITER GAUGE

For 5-speed spindle moulder with fixed table

1. Locate the miter gauge bar (A) Fig.3.28, and insert washer and (B) of bar into T-slot (C) of machine table.
2. Fig.3.29 illustrates the miter gauge bar (A) in the table slot. Place the miter gauge (D) on the bar with stud (E) of bar protruding up through opening in miter gauge body as shown. Fasten in place using washer (F) and lock knob (G).

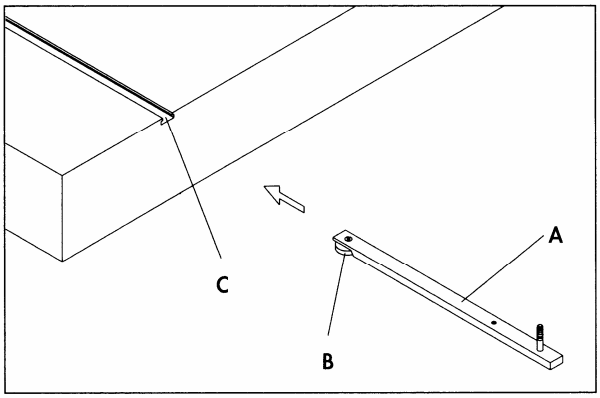

Fig. 3.28

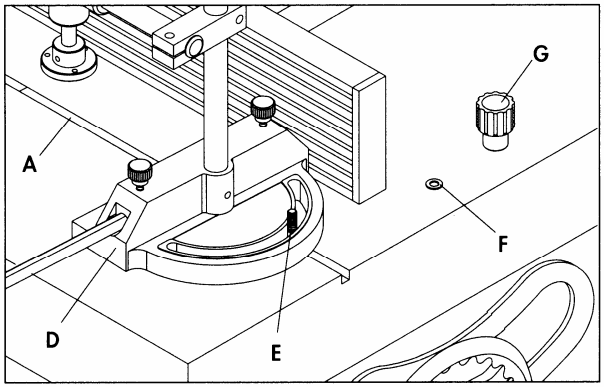

Fig. 3.29

For 5-speed spindle moulder with sliding table

1. Insert post (A) Fig.3.30 of the clamp assembly down through hole (B) of the miter gauge body (C), and threat post (A) into hole (D) of sliding table.
2. Insert shaft of locking handle (E) down through opening (F) of miter gauge and thread shaft into hole (G) of slogging table.

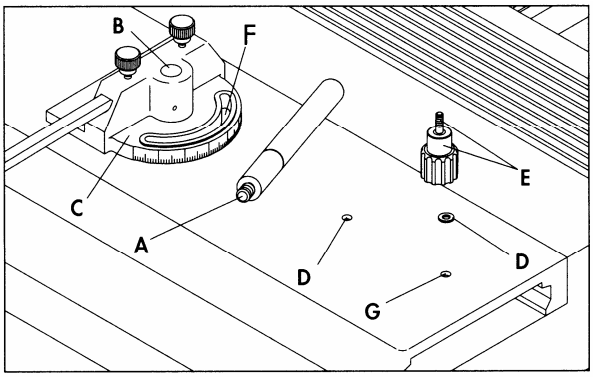

Fig. 3.30

For 3-speed spindle moulder with fixed table

1. Locate the miter gauge bar (A) Fig.3.31, and insert washer end (B) of bar into T-slot (C) of machine table.
2. Fig.3.32 illustrates the miter gauge bar (A) in the table slot. Place the miter gauge (F) on the bar. Fasten in place using washer (E) Fig.3.31 and locking knob (D).

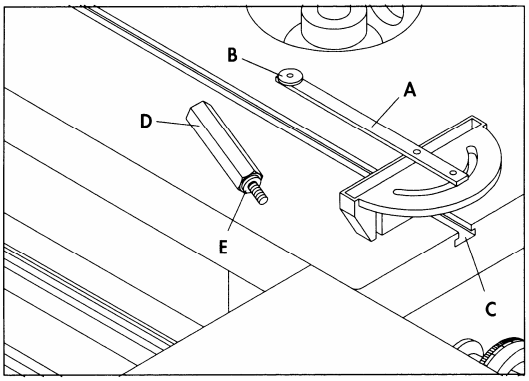

Fig. 3.31

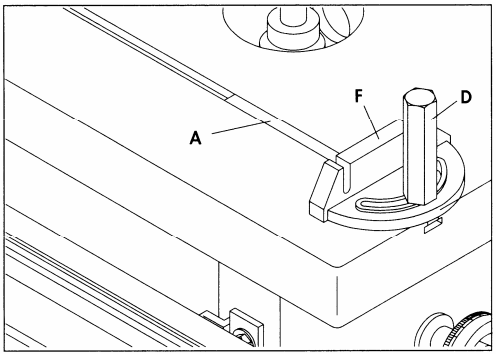

Fig.3.33

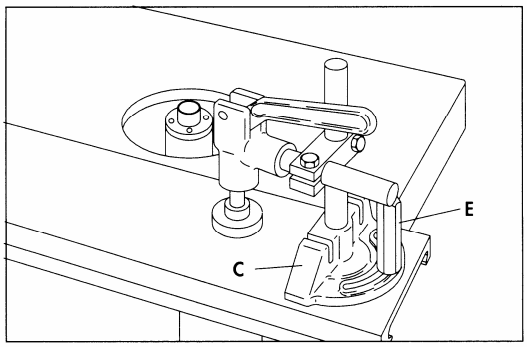

Fig.3.32

For 3-speed spindle moulder with sliding table

1. Insert post (A) Fig.3.33 of the clamp assembly down through hole (B) of the miter gauge body (C), and thread post (A) into hole (D) of sliding table.
2. Insert shaft of locking handle (E) down through opening (F) of miter gauge and thread shaft into hole (G) of sliding table.
3. Fig.3.34, illustrates miter gauge (C) and locking handle (E) assembled to the sliding table.

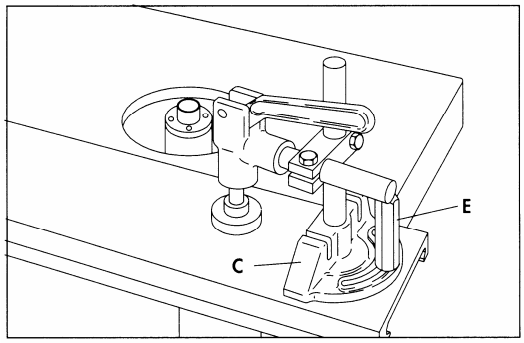

Fig. 3.34

ASSEMBLING STOP ROD/FENCE AND STOP TO MITER GAUGE

Stop rod for 5-speed spindle moulder

1. Insert stop rod (A) Fig.3.35, into hole on side of miter gauge body and lock in place with locking knobs (B).
2. Assemble stop (C) to stop rod (A) as shown, and tighten locking knob (D).

Miter gauge clamp

A clamp (E) Fig.3.35 is supplied with your miter gauge to securely hold workpieces when shaping small piece across the gain.

The clamp (E) can be moved up or down as required on post (F).

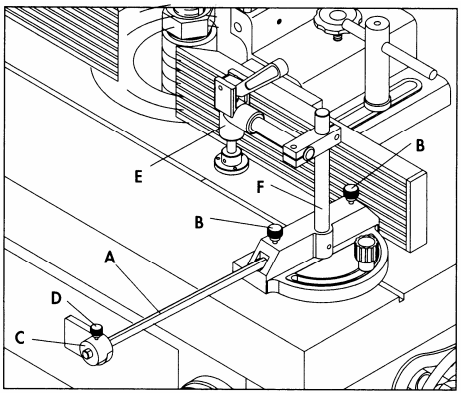

Fig. 3.35

Stop fence for silding table (optional)

1. Insert two nuts (A) Fig.3.36 of locking levers (B) into fence channel (C).
2. Position fence (E) Fig.3.37 on miter gauge with two screws (D) Fig.3.36 of locking levers engaged into two notch (F) Fig.3.37 on top of miter gauge.
3. To slide fence (E) Fig.3.37, to the left or right, loosen locking levers (B), slide fence (E) to the desired position and tighten locking levers (B). To tilt the fence (E), loosen locking handle (G).

   A scale (H) is provided to indicate the miter angle of the fence (E).
4. Loose locking levers (I) Fig.3.38, and insert nut (J) of stock stop assembly into channel on end of fence as shown.
5. Slide stock stop (K) Fig.3.39, to desired position on fence and tighten locking levers (I).

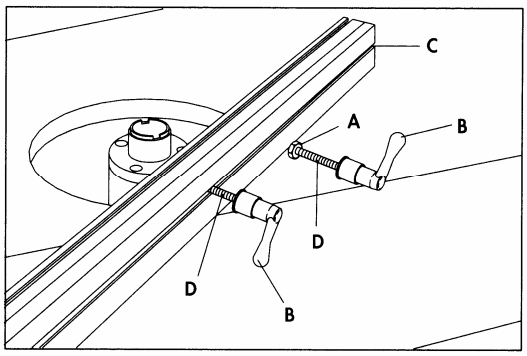

Fig. 3.36

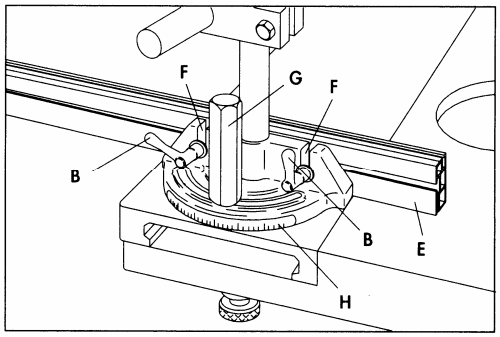

Fig. 3.37

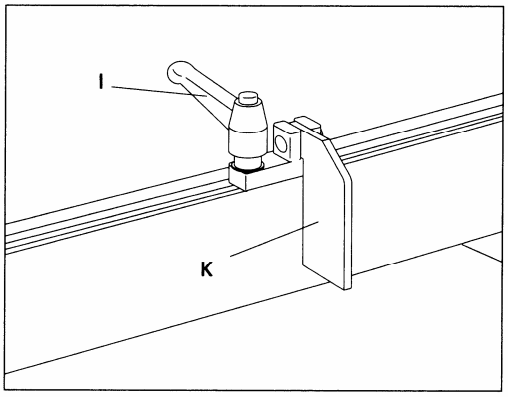

Fig. 3.38

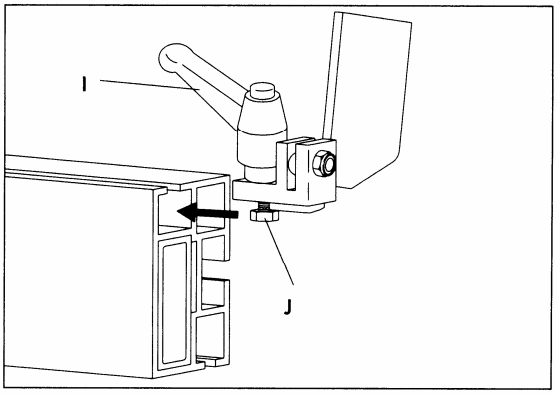

Fig. 3.39

3.12 SLIDING TABLE ADJUSTMENT (For sliding table only)

There are six adjustable eccentric rollers (A) Fig.3.40, on sliding table. Wherever the table is unstable or not traveling in line, adjust the sliding table as follow:

1. Use open end wrench (B) to adjust the rollers.
2. Lock the rollers by using the hex. Wrench (C)

SLIDING TABLE LOCK

To operate the sliding table (G) Fig.3.40, pull out and rotate knob (D) until it stays in the out position as shown. The sliding table can then be moved back and forth. To lock the sliding table, preventing it from moving, simply rotate knob (D), until knob (D) moves to the up position and the pin on the other end of the knob engages a hole underneath the table.

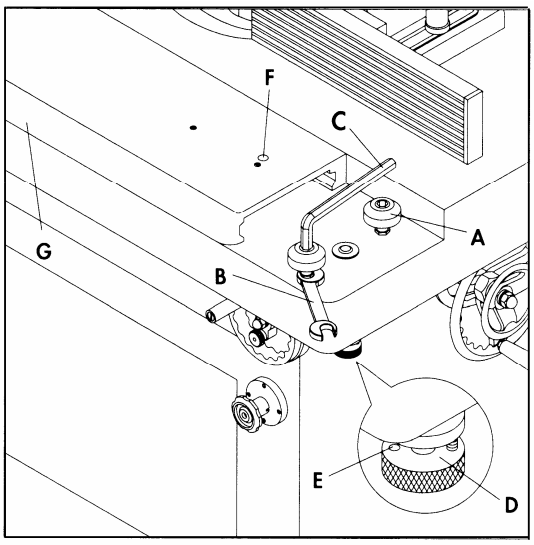

Fig. 3.40

3.13 EXTENSION SUPPORT ADJUSTMENT (For extension table only)

1. Loosen the two locking knobs (A) Fig.3.41 to loosen the extension bars.
2. Pull the extension support to the desired position
3. Tighten the two locking knobs to lock it.

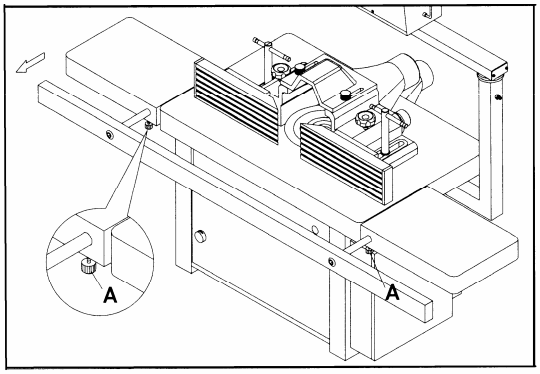

Fig. 3.41

3.14 TENONING CARRIAGE (optional)

IN UP POSITION FOR TENONING WORK

The 2-position tenoning carriage shall be used with tenoning hood and clamp attachment to ensure the safety and stability during operations. To operate the tenoning carriage, proceed as follows:

1. Push downwanrd the handle (A) Fig.3.42, to raise the table support (B) and tenoning table (C), than rotate the knob (D) until it moves to the right position.
2. Loosen the two locking levers (E) and slide the tenoning table (C) to the desired position. For accurate shaping with minimal vibration, the tenoning table should run close to he spindle.
3. Tighten two locking levers (E).

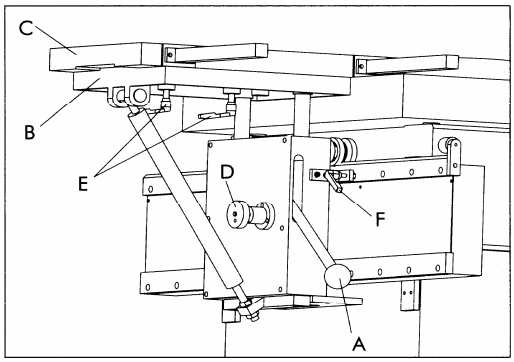

***TC-1 Tenoning Carriage/Heavy Duty type**

Fig. 3.42

IN DOWN POSITION AS EXTENSION TABLE

The tenoning carriage can be lowered to be at the same level of the machine table and used as an extension table for the machine of long workpiece.

1. Loosen the two locking levers (E), and slide the tenoning table (C) just away from machine table.
2. Slightly push downward the handle (A) to pull out and rotate the knob (D) until it stays in the out position, then guide the handle (A) to the top position, the tenoning table can be lowered.
3. Slide the tenoning carriage to the proper position on the rail.
4. Tighten locking lever (F) against the nearest screw head on the rail to prevent the tenoning carriage from moving.

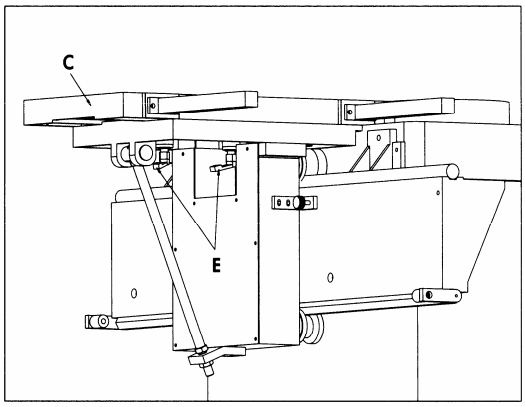

***TC1-e Tenoning Carriage/ Economic type**

Fig. 3.42.1

3.15 INSTALLING TENONING HOOD (optional)

1. Lean the hood on the table, regulate the distance from the cutters and secure the position by tightening the locking levers (A) Fig.3.43, Fig.3.44.
2. Regulate the height of the protection in respect of the cutters by turning the knobs (B)
3. Fences (C) Fig 3-44 shall always be used for tenoning work cutting to provide adequate guiding workpiece.

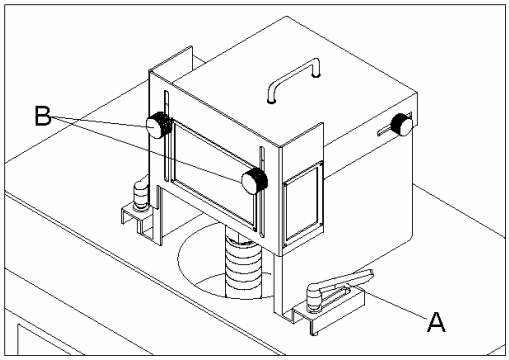

Fig. 3.43

《**WARNING**》 The machine should be equipped with the tenoning hood when doing tenoning work.

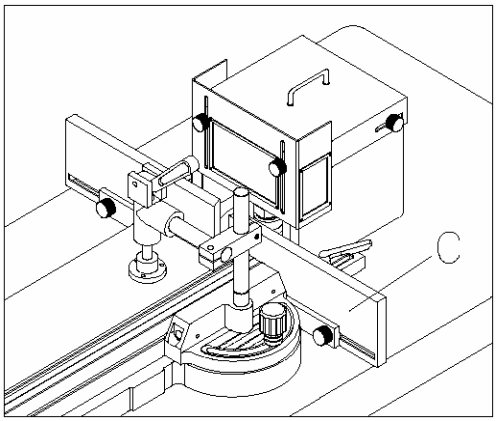

Fig. 3.44

3.16 INSTALLING CURVED WORK GUIDING (optional)

The machine should be equipped with the curved work guiding when doing curved work. Please buy the safety guard for curved work with a profession manufactures which products **are in compliance with of relevant (CE) regulations** such as Suva (French), Aigner(German) etc.

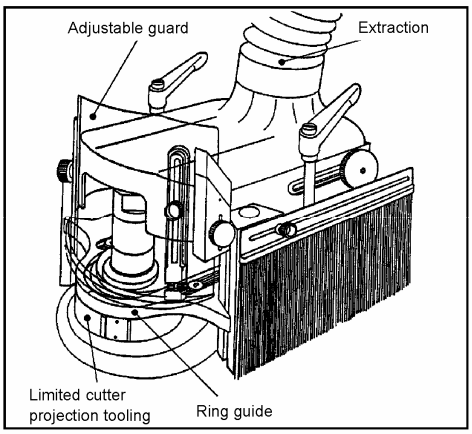

Fig. 3.45

The curve-cutting safety guard allows curved workpieces to be safely and economically shaped.

■ Good view of the workpiece from above and from the front, thanks to the window and the transparent guard
■ Pressure on the workpiece can be adjusted
■ Integral connection outlet for a chip and dust extraction
■ Very robust aluminium die casting
■ Quick and easy to adjust
■ Available in different versions

For moulding curved workpieces. A ball-bearing race (ball ring guard) or a curve cutting fence (ring guard) can be used as a fence. Consists of a curve-cutting safety guard, integral feed guide and two screws for installation on the machine table.

ring guard: Two curve ring guard for large and small curves with the required fixing bolts	ball ring guard: inner bore diameter 30 mm, 35 mm, 40 mm, 50 mm, 1.25 inch and 1.5 inch.

3.17 SET-UP AND OPERATION OF CONTROL STSTEM FOR PS-515/L

PS-515 plus, please refer to the addition instruction.

Type A- 9 different settings of spindle height positions.

CONTROL PANEL / FUNCTION OF KEYS

Fig.3.46 illustrates the control panel of programmable spindle molder PS-515/L

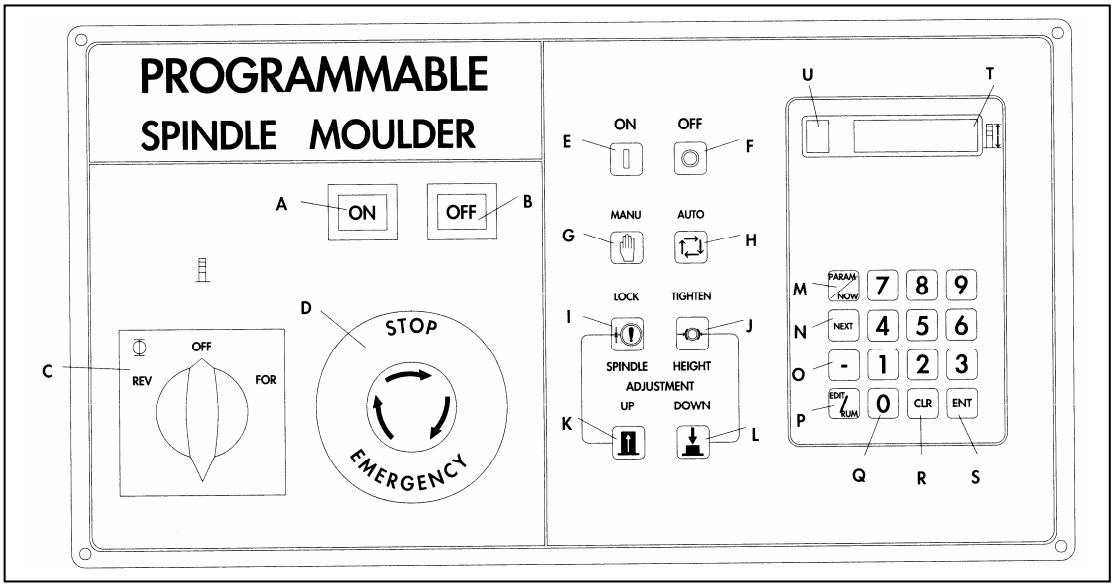

Fig. 3.46

A. Power on

B. Power off

C. Forward/reverse switch-for spindle rotation

D. Emergency stop

E. Main motor start

F. Main motor stop

《**NOTE**》Main motor will not start if forward/reverse switch is in neutral (“O”) position.

G. Manual operation for spindle height adjustment

H. Automatic operation for spindle height adjustment

I. Quick tool change ON (Under Manual operation)

J. Quick tool change OFF (Under Manual operation)

K. Spindle height adjustment-up

L. Spindle height adjustment-down

M. Param/now key-used to set/check up to 10 different spindle height setting and zero reference points(s).
N. Next key-each time next key is depressed digital readout advances to next parameter (setting).
O. Negative signal
P. Edit/run key-used to charge “EDIT” or “RUN” mode. Flashing L.E.D. indicates “EDIT” mode.
Q. Number-key (0~9).
R. Clear key- used to remove value and negative signal currently on digital display.
S. Enter key
T. Spindle height
U. Spindle height position

POWER CONNECTIONS

Before connecting from the starter to the power source, be sure that the voltage is of the same characteristics as the electrical system supplied with your machine. “EDIT/RUN” key should be on “RUN” (with no flashing L.E.D.).
Depress “UP” and/or “DOWN” key to check for proper direction. If motion is backwards change by re-connecting supply line(s) for proper direction.

ENTER A NEW SPINDLE HEIGHT SETTING

1. “EDIT/RUN” key should be set on “EDIT” (flashing L.E.D.).
2. Key-in desired spindle height setting on position “1” then depress “ENTER” key. The first preset is now set.
3. Follow steps 1 and 2 to enter additional presents.
4. After all setting are made depress “EDIT/RUN” key till set on ”RUN” mode (with no flashing L.E.D.). From this point on each time the “Enter” key on the control panel is depressed the spindle height setting will advance one setting.

CHECKING SETTINGS ALREADY SET-UP IN SYSYEM

1. “DEIT/RUN” key should be set on “RUN” (with no flashing L.E.D).
2. Depress the “PARAM/NOW” key to view digital readout of current spindle height setting.
3. Depress the” NEXT” key to view digital readout all other settings currently in the system.

SETTING ZERO REFERENCE POINT

1. “EDIT/RUN” key should be set on “EDIT’ (flashing L.E.D.).
2. “PARAM/NOW” key should be set on “PARAM” (comma, showing on display).
3. Depress “NEXT” key, then “O” key, then “ENTER” key to set zero reference. Point.

AUTOMATIC OPERATION

1. Install cutter(s) on spindle. For this example three cutters are used and three height settings-one for each cutter.
2. In manual mode adjust spindle height to proper setting for cutter “A”, as shown in Fig.3.47. Set reference point for setting no.1.
3. Setting no.2 for cutter “B” in the same manner, as shown in Fig.3.48. Repeat for other cutters if needed.
4. For last setting in cycle (in this example we have 3 settings) set to zero setting point as shown in Fig.3.49-this indicates end of cycle and next setting will be no.1 again.

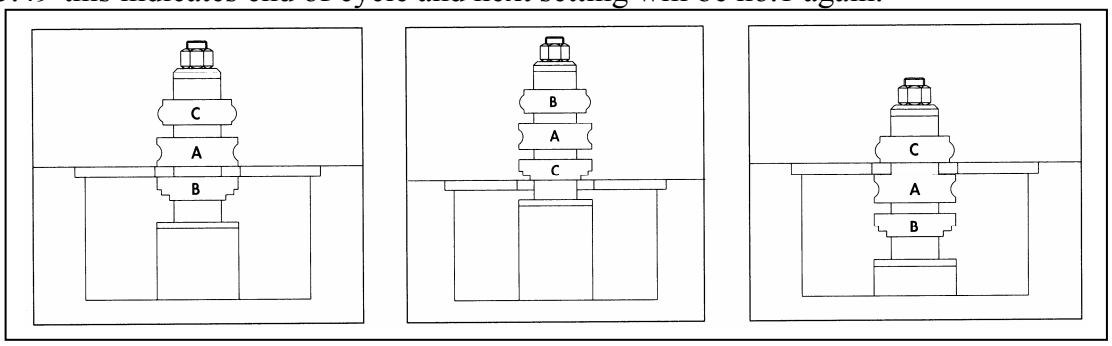

Fig. 3.47 Fig. 3.48 Fig. 3.49

WARNING SIGNAL

1. “00”: Emergency stop button not reset or cabinet door is not perfectly closed.
2. “01”: Spindle motor has been overloaded and tripped thermal overload protector in magnetic starter-needs reset.
3. “02”: Spindle height is too height tripping limit switch at end of travel.
4. “03”: Spindle height is too low tripping limit switch at end of travel.
5. “04”: Spindle lifting motor (up & down) has been overloaded and tripped thermal overload protector in magnetic starter-needs reset.
6. “05”: Pneumatic cylinder (sensor 1) is not located in the correct position.
   -Make sure the notch on the tool holder, is engaged with tang on the shaft.
7. Draw bar (sensor2) is not located in the correct position.
   '-Make sure the notch on the tool holder, is engaged with tang on the shaft.

PRESETTING PARAMETER

Parameter	Description	Unit	Preset value by manufacturer	Recommended value
1.	Locking time for shaft sleeve	0.01sec	0	0
2.	Pre-setting time for spindle up	0.1mm	6	5-8
3.	Pre-setting time for spindle down	0.1mm	15	10-20
4.	Spindle lifting motor running time for positioning	0.01sec	3	2-4
5.	Spindle lifting motor intermission time for positioning	0.01sec	15	10-25
6.	Encoder reset	0.1mm	0	-------

《NOTE》 When the actual value/position exceeds the target value/position, please adjust the parameter by increasing the value of PARAMETER 2 or reducing the value of PARAMETER 4.
When the target value/position exceeds the actual value/position, please adjust the parameter by reducing the value of PARAMETER 2 or increasing the value of PARAMETER 4.

ADDITIONAL INSTRUCTION FOR PS-515 SERIES

SETTING THE ZERO POINT FOR SPINDLE HEIGHT
(Users could chose suitable position within spindle stroke to be Zero point)

1. Press the **"MANUAL"** button, use the ⇧ and ⇩ button adjust the spindle. Adjust the spindle so the centre of the spindle shaft length is level with the table top of the machine.

2. This is going to be the **zero** point for the spindle height.

3. Press the **"EDIT/RUN"** button, you will see the far right hand digit flashing. If the display is showing 1_ _020.0 then the controller is in the mode for editing the program for the shaft heights. Press the **"PARAMETER/NOW"** button and the decimal point will disappear, 1. _0000 (original the decimal is in the far right hand, now the decimal is in the far left hand) now you are in the mode for editing the parameter settings. Using the **"NEXT"** button scroll through the parameters until you are at parameter setting **6**. Change this digit to **0** and press the **"ENTER"** button. To get out of the parameter settings press the **"EDIT/RUN"** button once and the last digit on the right will stop flashing.
_ 000.0 (right hand digit is 0 means the position is set to be the zero point.)

DETERMINING CUTTER HEAD POSITIONS

1. Stack the cutters onto the spindle shaft.

2. Press the **" MANUAL"** button, then using the ⇩ button lower the spindle shaft until the bottom cutter head is within 10mm of the cast iron well in the bottom of the machine.

3. Open the front door of the machine and adjust the bottom safety micro switch up to this point. This will eliminate any chance of the bottom cutters **" crashing"** inside of the machine. Please note that this will need to be checked and re-adjusted again if new cutters are installed onto the spindle shaft.

4. To be "MANUAL" mode and use the ⇧ and ⇩ buttons to adjust the top cutter to the correct height.
Press the "PARAMETER/NOW" key to be "NOW" and check the displayed height for this cutter head and record this measurement. Using this method set the heights of the other cutter blocks and record their measurements. Please note that some of the height measurements can be a **– minus** number also)

ENTERING THE PROGRAMS FOR CUTTERHEADS

1. You have 9 different heights you can program into this machine.

2. To enter the programs press the **"EDIT/RUN"** button, there should be a decimal point on the display with the far right hand side 1_ _020.0 flashing. (Please make

sure that you are in the **"AUTO"** mode as the last digit will not start to flash if you are in the **"MANUAL"** mode.)

3. Enter in the height number for your first cutter head **"1"** (you recorded this earlier.) Once you have entered the number in the controller press the **"ENTER"** button. This has now entered program one into the controller, the display will now automatically jump to program position **"2"**.

4. Enter in the number for program **"2"** and press the enter button. Repeat this process until all the cutter heads are programmed in.

5. To return back to the main screen press the **"EDIT/RUN"** button again. (the digit in the far right hand side stops flashing.)

RUNNING PROGRAMS IN "AUTO" MODE

1. Using the **"NEXT"** button you can scroll through the 9 different programmed heights.

2. To run any of these programs press the **"ENTER"** button.

3. Please note once the cutter head has reached the programmed height the controller will automatically jump to the next program. Example- if you have just run step **5**, once the cutter reaches the set height the controller will jump to step **6**. (If you wish to scroll through the programs of height just press the **"NEXT"** button.)

4. While the machine is moving you can check on the cutters position by pressing the **"PARAMETER/NOW"** button. You will now notice the numbers counting. Please note that you must press the **"PARAMETER/NOW"** key again to get back to the programs again.

SPECIAL NOTES

1. If you do make any changes to the spindle height setting by accident, you can re enter the correct spindle height settings again as listed in the manual in section 8. You can access the parameters as listed above in the setting the Zero position of the spindle shaft.

2. To move the spindle up and down using the ⇧ and ⇩ buttons make sure that the machine is in **"MANUAL"** mode not **"AUTO"**.

3. Before you turn off, please set Zero position of spindle. (To chose one of 9 to be Zero in order to be the Zero position of spindle), to make sure the spindle is in the correct Zero position when you turn on the machine again.

PS-515/L Type B-900 different settings of spindle height positions.

Control Panel / Function of Keys

-Control Panel

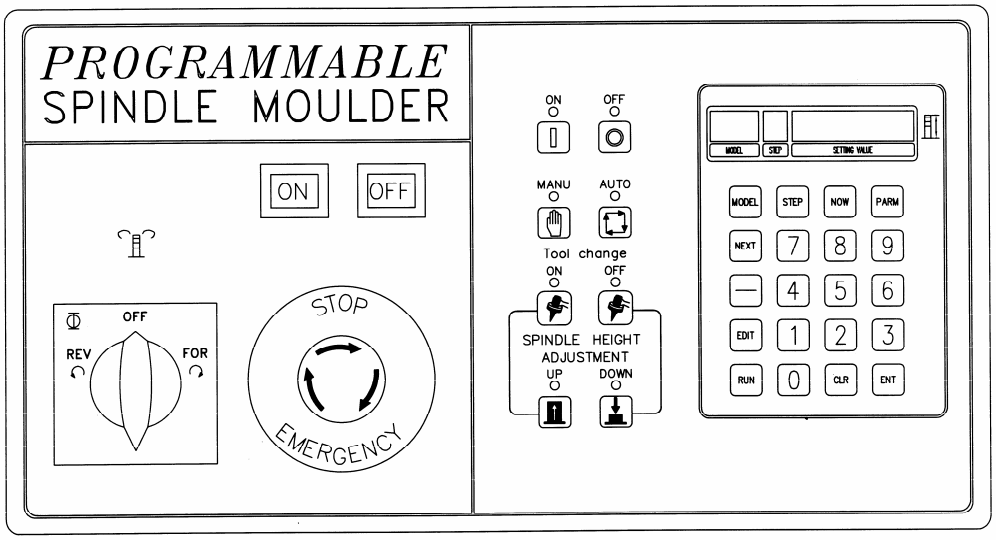

1 Key Function

1.1 Power ON

1.2 Power OFF

1.3 Forward/reverse switch for spindle rotation

1.4 Emergency stop

1.5 Main motor start

1.6 Main motor stop

《NOTE》 Main motor will not start if forward/reverse switch is in neutral ("O") position.

1.7 Manual Mode : Manual operation for spindle height adjustment

1.8 Auto mode: Automatic operation for spindle height adjustment

1.9 Quick tool change ON (Under Manual operation)

1.1 Quick tool change OFF (Under Manual operation)

1.11 Spindle height adjustment-up (Under Manual Operation)

1.12 Spindle height adjustment-down (Under Manual Operation)

1.13 Execute key after turning power on or editing

1.14	NEXT	Next key-Go to next group (model/step/setting value) or parameter. It can skip the next group or section and jump to the 3rd group or section if running under the auto mode.
1.15	EDIT	EDIT key: Pre-setting position of the working piece. Flashing L.E.D. indicates "EDIT" mode.
1.16	CLR	Clear key- used to remove value and negative signal currently on digital display
1.17	ENT	Enter key: Enter the exactly digit or execute auto registration (It must operate under Auto mode)
1.18	NOW	Now key-used to set/check up to 900 different spindle height setting and zero reference points.(If under setting value, there will be some numbers after the decimal point at the MODEL column.)
1.19	PARAM	Setting Parameter (It must operate under Edit mode)
1.2	MODEL	Group-MODEL key (00~99 sets)
1.21	STEP	Group-STEP key (1~9 sections)

2 POWER CONNECTIONS

Before connecting from the starter to the power source, be sure that the voltage is the same as the electrical system supplied with the machine.

Press "RUN" key and press the" UP" and/or "DOWN" button to check for proper direction. If the motion is backwards, change it by re-connecting supply line(s) for proper direction.

3 HOW TO SET UP THE NEW VALUE:

3.1 Press the "EDIT" key. The column of SETTING VALUE will flash the L.E.D. when it is under EDIT mode.

3.2 Select the desired setting group of MODEL / STEP.

a. The range of the setting group-MODEL is from 0 to 99 groups. Press the "MODEL" key. The column of MODEL will flash. Enter the desired number or use the "NEXT" key to search the group and press "ENT". Then, the group-MODEL setting has been completed and the flashing will stop.

The number at the SETTING VALUE will flash.

b. The range of the setting section is from 1 to 9 sections. Press the "STEP" key. The digit in this column will flash. Follow the directions above and the section setting is complete.

The number at the SETTING VALUE will flash.

c. The range of the position setting depends on the spindle travel. Key-in the desired spindle height setting and press "ENTER."

3.3 Follow steps 3.2 (a) and (b) to enter additional presets for each MODEL and STEP (section) . After all settings are made press the "RUN" key and the spindle height setting is ready to run.

4. HOW TO SEARCH PREVIOUS SETTINGS TO SET UP/CHECK THE SPINDLE HEIGHT IN SYSTEM:

4.1 Press the "MODEL" key and the column of MODEL will flash. Then, press "ENT" or enter the desired group number.
Press the "ENT" key again.

4.2 Press the "STEP" key and the column of STEP will flash. Then, press the "ENT" or enter the section number that you need.
Press the "ENT" key again.

5 SETTING THE ZERO REFERENCE POINT:

5.1 Press the "EDIT" key to get into edit status (flashing L.E.D.)

5.2 Press the "PARAM" key. When "P-" is in the MODEL column, the machine in the mode to edit parameter settings. The value at the SETTING VALUE will flash.

5.3 Using the "NEXT" key scroll through the parameters until at parameter setting 6. Change this digit to "0 "and press the "ENTER" key. Then, press the "PARAM" key and press the "RUN" key again to complete setting the Zero Reference Point

6 PRESETTING PARAMETERS

Parameter	Description	Unit	Preset value by manufacturer	Recommended value
1	Locking time for shaft sleeve (unavailable)	0.01sec	0	0
2	Pre-setting time for spindle up	0.1mm	7	5-8
3	Pre-setting time for spindle down	0.1mm	15	10-20
4	Spindle lifting motor running time for positioning	0.01sec	3~4	2~4
5	Spindle lifting motor intermission time for positioning	0.01sec	25	10-25
6	Encoder reset	0.1mm	0	----------

7 WARNING SIGNAL

7.1 00: Emergency stop button not reset or cabinet door is not perfectly closed.

7.2 01: Spindle motor has been overloaded and tripped the thermal overload protector in magnetic starter. Needs to be reset.

7.3 02: Spindle height is too high and has tripped the limit switch at end of travel.

7.4 03: Spindle height is too low and has tripped the limit switch at end of travel.

7.5 04: Spindle lifting motor (up & down) has been overloaded and tripped thermal overload protector in magnetic starter. Needs to be reset.

7.6 05: Pneumatic cylinder (sensor 1) is not in the correct position.
-Make sure the notch on the tool holder is engaged with the tang on the shaft.

7.7 06: Draw bar (sensor 2) is not in the correct position.
-Make sure the notch on the tool holder is engaged with the tang on the shaft.

ADDITIONAL INSTRUCTION FOR PS-515 SERIES

Type A

ITEM SPINDLE HEIGHT POSITION(mm)

1～9

Total: 9 sets

Type B

MODEL 0～99 The model value can be set from 0 to 99 (i.e., 100 values), each of which designates a different type of workpeice.

STEP 1～9 spindle height position (mm)

Under each MODEL number, the STEP can be set from 1 to 9 (i.e., 9 values), each of which stores different spindle height position.

To contrast, Type A has 9 different settings, and Type B has 100 (models) x 9 (steps) = 900 different settings of spindle height positions.

To illustrate, the following diagrams show two different configurations.

Example 1 1. 66 (MODEL) 1 (STEP) 160 (SETTING VALUE) In this configuration, when Model is set to 66 and Step 1, the spindle height position is 160mm.

Example 2 2 66 (MODEL) 2 (STEP) 70 (SETTING VALUE) In this configuration, when Model is set to 66 and Step 2, the spindle height position is 70mm.

⋮

Example 3 9 66 (MODEL) 9 (STEP) 110 (SETTING VALUE) In this configuration, when Model is set to 66 and Step 9, the spindle height position is 110mm.

Operation Procedures

1. How to set up the new value of a position

EDIT
↓
MODEL
↓
Key in number 0~99
↓
ENT
↓
STEP
↓
Key the no. 0~9
↓
ENT
↓
Enter the value user needs when the digital flashing.
↓
ENT
↓
RUN
↓
Setting finished.

2. How to inquire about the cutter position

EDIT
↓
MODEL
↓
Enter the value user needs

ENT → Restart the program

OR

NEXT → To search the value → ENT → Restart the program

EDIT
↓
STEP
↓
Enter the value user needs

ENT → Restart the program

OR

NEXT → To search the value → ENT → Restart the program

CHAPTER 4. OPERATION

4.1 STRAIGHT WORK

Using the fence is the safest and most satisfactory method of shaping, and should always be used when the work permits. Almost all straight work can be done with the fence.

1. For normal work, where a portion of the original edge of the stock is not touched by the cutter, both the infeed and outfeed fences are in a straight line, as shown in Fig.4.1.
2. When the shaping operation removes the entire edge of the stock, e.g. in jointing or making a full bead, the shaped edge will not be supported by the outfeed fence edge when both fences are in line, as shown in Fig. 4.2. In this case, the stock should be advanced to the position shown in the Fig.4.2 and stopped. The outfeed fence should then be moved forward to contact the work, as shown in Fig.4.3. The outfeed fence will then be in line with the cutting circle, and the operation can continue.

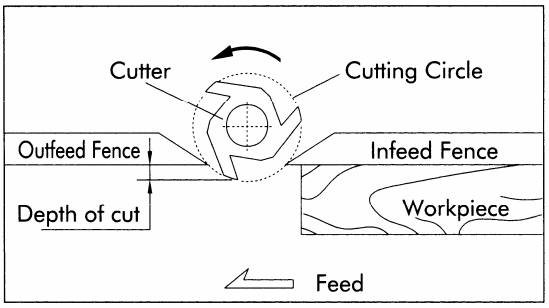

Fig. 4.1

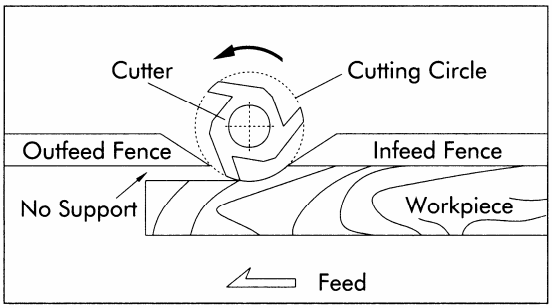

Fig. 4.2

《**WARNING**》 Keep guards in place and in working order. Always use fence assembly when the work permits.

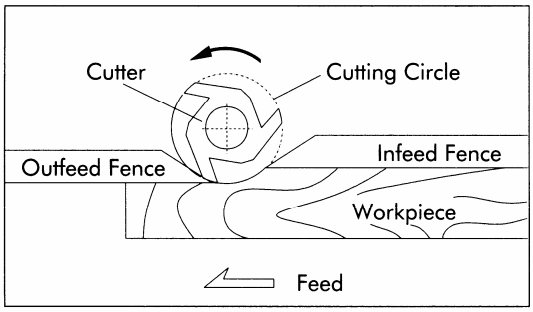

Fig. 4.3

4.2 POSITION OF COLLARS

When shaping with collars, the collar must have sufficient bearing surface, as shown in Fig.4.4. Also the work must be fairly heavy relative to the cut being made. Under no circumstances should a short, light work-piece be shaped against the collars, as shown in Fig. 4.5.

The collars may be used in any of the following positions: above, below, or between the cutters.

1. When the collar is used below the cutter, as shown in Fig.4.6, the progress of the cut can be seen throughout the operation. However, any accidental lifting of the work will gouge the wood and ruin the work-piece.
2. When the collar is used above the cutter, as shown in Fig. 4.7, the cut can not be seen, but this method offers an advantage in that the cut is not affected by light variations in the thickness of the stock. Also, accidental lifting of the work-piece will not gouge the work-piece; simply repeat the operation to correct the mistake.
3. Using the collar between two cutters has the advantages and disadvantages of the first two procedures, and is frequently used where both edges of the work are to be molded, see Fig.4.8.

《**NOTE**》 It is advisable to place the cutter as low as possible on the spindle to reduce spindle deflection and ensure the best possible finish. Also make sure that the contacting surfaces of the cutter are smooth, clean and without dents.

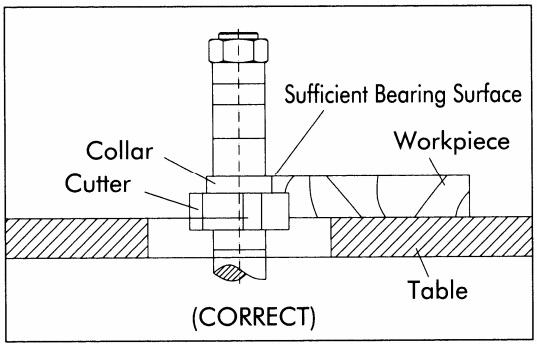

Fig. 4.4

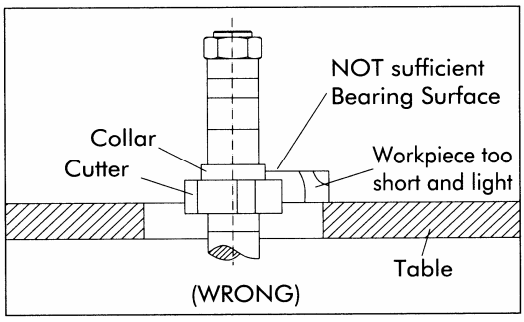

Fig. 4.5

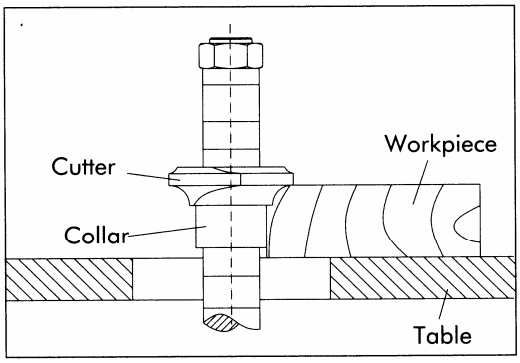

Fig.4.6

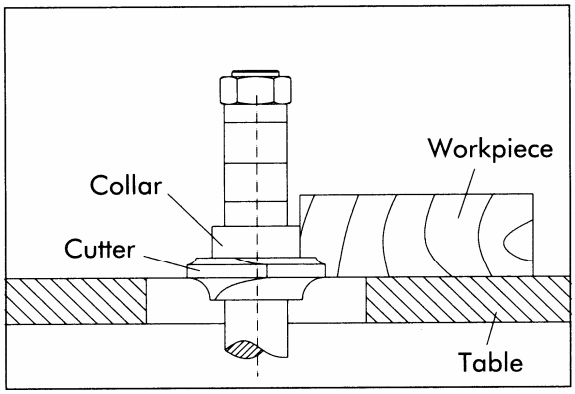

Fig.4.7

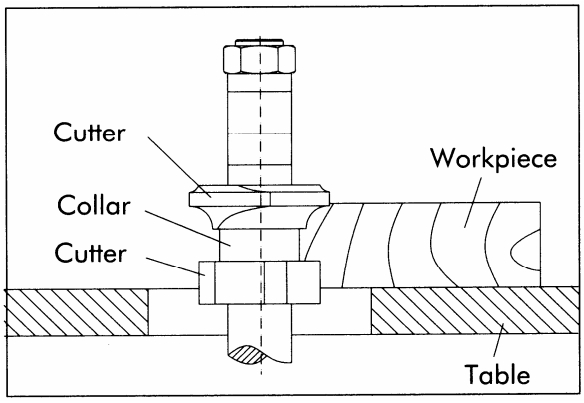

Fig. 4.8

4.3 TENONING

The provided miter gauge and clamp can be used for tenoning operations. The tenoning hood fitted with adjustable sections shall be used to guard the tool form above the work-piece and from the sides.

《**WARNING**》 Keep guards in place and in working order. Always use tenoning hood when processing tenoning machining.

4.4 CURVED WORK

Keep guards in place and in working order. Always use curved work guiding when processing curved work. Please buy the safety guard for curved work with a profession manufactures which products **are in compliance with of relevant (CE) regulations,** such as Suva (French), Aigner(German) etc.

It is with integral outlet for connection with a dust and chip collection. To machine curved and circular workpieces economically, accurately and with maximum regard for safety.

This safety and working unit enables fast and low risk machining of curved workpieces, the power feed unit can also be used with this device. The guard can be easily and quickly fitted to the table of spindle moulder with the use of tools. Adjustment for transparent guide height and position is both quick and accurate. It is possible to use the guard for both clockwise and counter-clockwise machining. The guard brushes are infinitely adjustable.

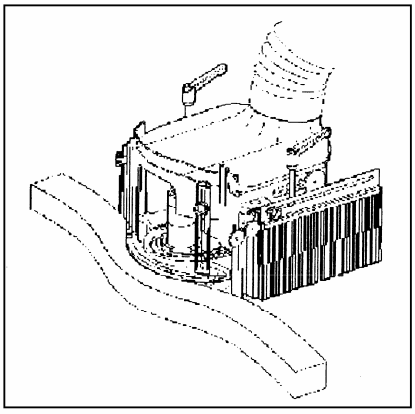

Example of curved work

Fig. 4.9

CHAPTER 5. MAINTENANCE

Before any maintenance/lubrication works, the electricity power should be shut off to avoid any involuntary retstart.

5.1 LUBRICATION

Do not operate machine until properly lubricated.

Apply a drop of light machine oil occasionally on the ledge and wall of the table opening to facilitate the changing of table rings.

The bearings in the motor are sealed for life and do not require lubrication.

The spindle bearings should be lubricated every 200 hours of use by using the grease gun (A) Fig.5.1, supplied.

Two grease fittings, one of which is shown at (B), are supplied on the spindle housing for this purpose. The other grease fitting is directly opposite fitting (B). Before lubricating, clean grease fittings (B) thorough and lubricate the spindle bearings with two pumps of one of the following greases:

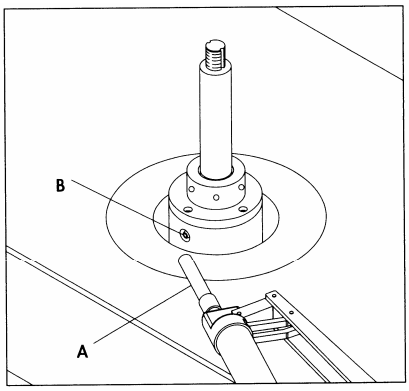

Fig. 5.1

Shell Alvania grease R2

Dow Corning MolyKoke R BR2

Esso-Becon 2

Mobile-Mobilplex 47

Texaco-Startex 2

SUGGESTED CHECKING

Index position	Interval / Situation
Spindle ball bearings	Every 200 hours of use
Belt	Every 1000 hours of use or check belt whenever get frayed
Emergency stop	Every day/ by functional test-press checking
Interlocked guards	Every day/ by opening each guard in turn to stop the machine and by proving the inability to start the machine with each guard in the open position
The mechanical brake	Every 100 hours of an operation use or by brake function testing to check that the machine is braked within the specified time (less than 10 sec)
Electrical cabinet/system	Monthly check: wiring terminals loosening, insulation deterioration

《**NOTE**》 After a set/or adjustment/or repair work or a trouble shooting, please check the safety relevant functions whether normal or not before a use.

5.2 PERIODICAL MAINTENANCE

Periodically clean the inside of the machine from eventual presence of shaving or dust. Machine cleaning increases the machine life and its performance.
To replace the ball bearings you should call skilled technician, then for this necessity contact your local agent.
Clean the spindle with compressed air.
Do not get oil on the pulleys and belts. If they are dirty, use paper or a soft rag to clean and dry them.
Never place the V-belt under excessive strain, as this can overload the motor and damage the bearings, spindle or belt.

5.3 KEY HANDLE FOR CONTROL CABINET

Using special key handle (A), open the control cabinet as shown.(Fig. 5.2)

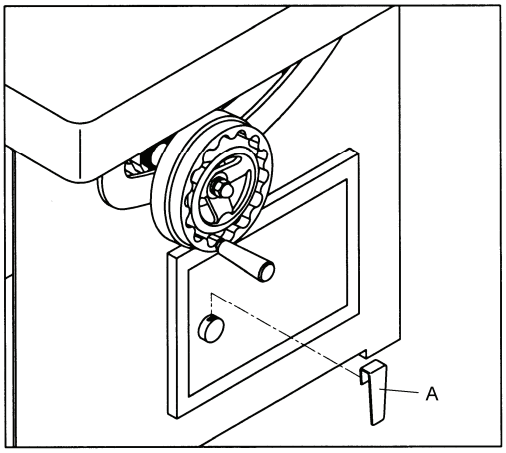

Fig. 5.1

CHAPTER 6. TROBULE SHOOTING

TROUBLE	POSSIBEL CAUSE	SOLUTION
Machine will not start.	1. Fuse blown or circuit breaker tripped. 2. Cord damaged.	1. Replace fuse or reset circuit breaker. 2. Have cord replaced by authorized service person.
Overload kicks out frequently.	1. Extension cord too light or too long. 2. Feed stock too fast. 3. Cutter is dull or has gum on it.	1. Replace with adequate size cord. 2. Feed stock more slowly. 3. Clean or replace cutter.
Tool does not come up to speed.	1. Extension cord too light or too long. 2. Low current. 3. Motor not wired for correct voltage. 4. Spindle is locked.	1. Replace with adequate size cord. 2. Contact local electric company. 3. Refer to motor nameplate for correct wiring. 4. Replace spindle lock knob.
Machine makes unsatisfactory cuts.	1. Dull cutter. 2. Gum or pitch on cutter. 3. Gum or pitch on table causing erratic feed. 4. Feeding work in wrong direction.	1. Replace cutter. 2.Remove cutter and clean with turpentine and steel wool. 3. Clean table with turpentine and steel wool. 4. Feed work against cutter rotation.
Stock burns.	1. Dull cutter. 2. Cutter too deep. 3. Forcing work.	1. Sharpen by honing on flat side. 2.On hardwoods take light cuts; attain full depth of cut with several passes. 3.Feed slowly and steadily.
Machine vibrates excessively.	1. Damaged tool. 2. Stand or bench on uneven floor. 3. Bad V-belt. 4. V-belt not tensioned correctly. 5. Bent pulley. 6. Improper motor mounting.	1. Replace tool. 2. Reposition on flat, level surface. 3. Replace belt. 4. Adjust belt tension by moving motor bracket. 5. Replace pulley. 6. Check and adjust motor mounting.
Edge splits off on cross-grain cut.	Characteristic of cut.	1.Make cross-grain cuts first then finish with grain. 2. Use scrap block to support at end of cut.
Raised areas on shaped edge.	Variation in pressure which holds work against cutter.	1.Keep work firmly against fence or collars throughout pass. 2. Use hold-downs.
Work pulled from hand of cut.	Not support.	1.Use miter gauge with hold-down to start cut when freehand; hold work firmly against fence. 2. Adjust the tension of spring plate.
Depth of cut not uniform.	1. Misalignment. 2. Side pressure not uniform.	1. Adjust out-feed fence. 2.Use hold-downs; keep pressure against fence or collars consistent.
Variation in Height of cut.	Variation in pressure which holds work down on table.	1. Keep pressure firm throughout pass. 2. Use hold-downs. 3. Make pass slowly and steadily. 4. Whenever possible, keep cutter under stock.
Cuts not smooth.	1. Wrong R.P.M. 2. Feeding too fast. 3. Working against grain. 4. Cutting too deep.	1. Use faster speed. 2 .Pass stock more slowly. 3. Work with grain whenever possible. 4. On very deep cuts make several passes.
Spindle does not raise freely.	Sawdust and dirt in raising mechanisms.	Brush or blow out loose dust and dirt.

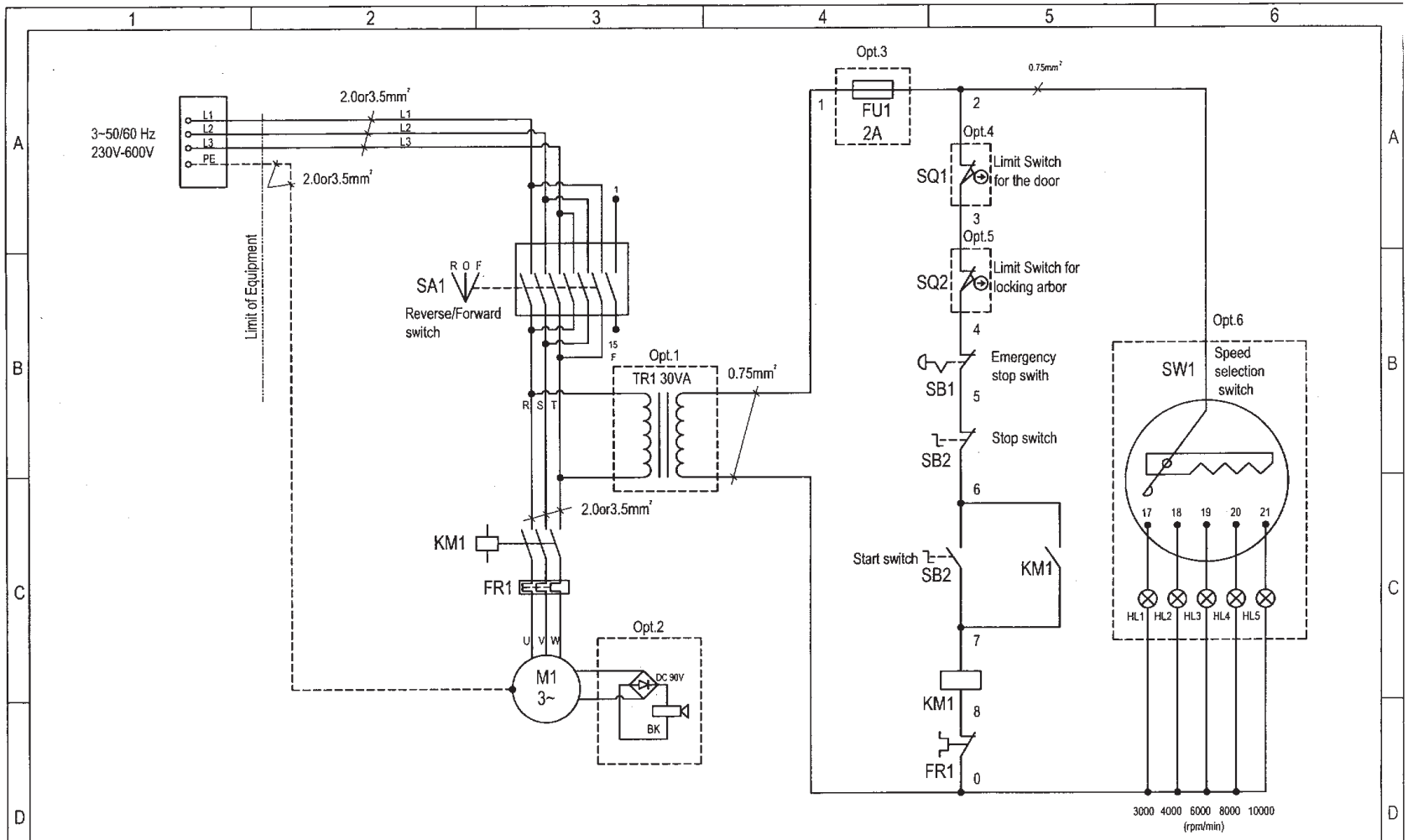

√	opt.1	Transformer
	opt.2	Brake
√	opt.3	Fuse
	opt.4	Limit switch for the door
√	opt.5	Limit switch for locking arbor
√	opt.6	Speed indicator

SS-STD-3PH-130408	SPINDLE MOULDER SS-511/512/513/512TL	2012.04.08
		Page1

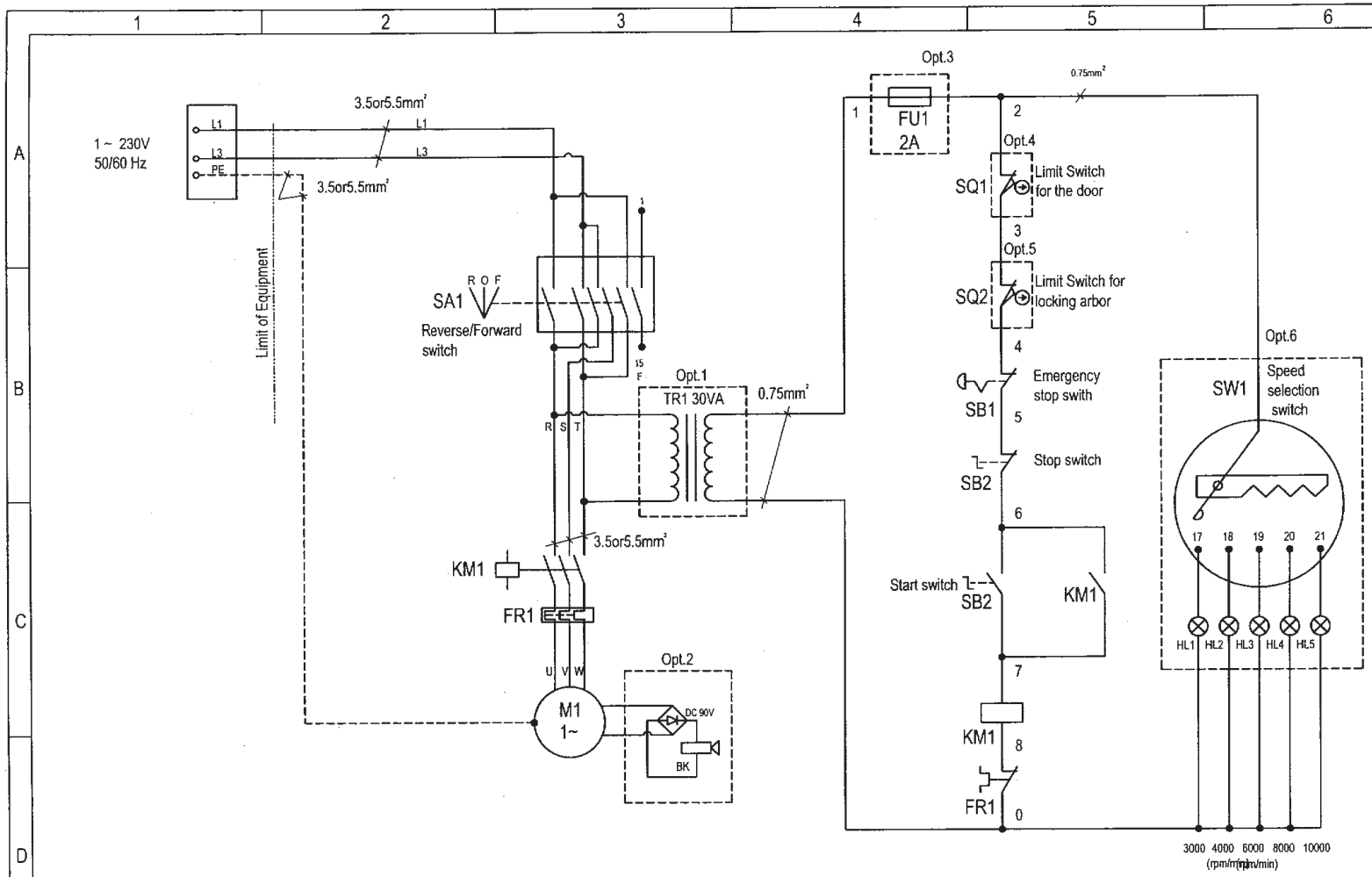

V	opt.1	Transformer
	opt.2	Brake
V	opt.3	Fuse
	opt.4	Limit switch for the door
V	opt.5	Limit switch for locking arbor
V	opt.6	Speed indicator

SS-STD-1PH-130408	SPINDLE MOULDER SS-511/512/513/512TL	2012.04.08
		Page1

SS-512/512L Series

FA-01-512 w/Std. aluminum fence

REF NO.	PART NUMBER	DESCRIPTION		Q'TY
1	5122190	DUST COLLECTOR		1
2		HEX SOC SET SCR	M8x20	2
3	5112091	ADJ KNOB		2
4		HEX SOC HD SCR	M5x12	6
5	5122080	PLATE		2
6	5112070	ADJ. SCREW BOLT(RH)		1
	5112071	ADJ. SCREW BOLT(LH)		1
7	5122060A	RAM		2
8	5112050	LOCK HANDLE		2
9		THICK WASHER	M14	2
10	5112560	CAP RH	FOR Alum. Fence 130mm	1
	5122280	CAP RH	FOR Alum. Fence 150mm	
11	5105024	BLOCK RH		1
12	5105025	BLOCK LH		1
13		HEX SOC HD SCR	M6x30	4
14	5122221	ALUM. FENCE	130x420mm	1
	5122226	ALUM. FENCE opt.	150x600mm	
15	5122220	ALUM. FENCE	130x420mm	1
	5122227	ALUM. FENCE opt.	150x600mm	
16	5122210	GUIDE		2
17	5112561	CAP LH	FOR Alum. Fence 130mm	1
	5122281	CAP LH	FOR Alum. Fence 150mm	
18		FLAT WASHER	M8x5t	2
19	PH045KBBM845	LOCK LEVER	M8x45	2
20	5112410-1	GUIDE	PC	1
22	5112530	BAR HORZ	13mm-396L	1
23	5112480	BLOCK		3
24	5112490	CLIP		8
25	5112520	BAR HORZ	13mm-396L	1
26	5112500	BAR HORZ	13mm-350L	1
27		WARNING LABEL		1
28	5122040A	FENCE BODY		1
30		COPPER CHEESE HD SCREW	M6x20	1
31	5112100	LOCK KNOB	M12x32	2
35	5112420	GUIDE		1
36		HEX NUT	M8	1
37		HEX SOC SET SCR	M8x35	1
38		SPRING WASHER	M5	2
39		LOCK NUT	M5	2
40	5112430	CAM WASHER		2
41		HEX SOC HD SCR	M5x10	2
42		HEX SOC HD SCR	M5x10	1
43	5112460	LATCH		1
44	5112450	BRACKET		1
45		HEX SOC HD SCR	M6x20	4
46		SPRING WASHER	M6	8
47		HEX NUT	M6	1
48	5112540-4	KNOB W/STUD	M8x35L	2
49		FLAT WASHER	M8	2
50	5122150	PLATE		1
51	5112470	BAR VERT	13mm-136L	1

REF NO.	PART NUMBER	DESCRIPTION		Q'TY
52		THUMB SCREW	M8x16	6
53		FLAT WASHER	M5	4
54		CHEESE HD SCREW	M5x12	4
55		FLAT WASHER	Ø1/2"xØ25x2t	2
56		RETAINING RING	S13	2

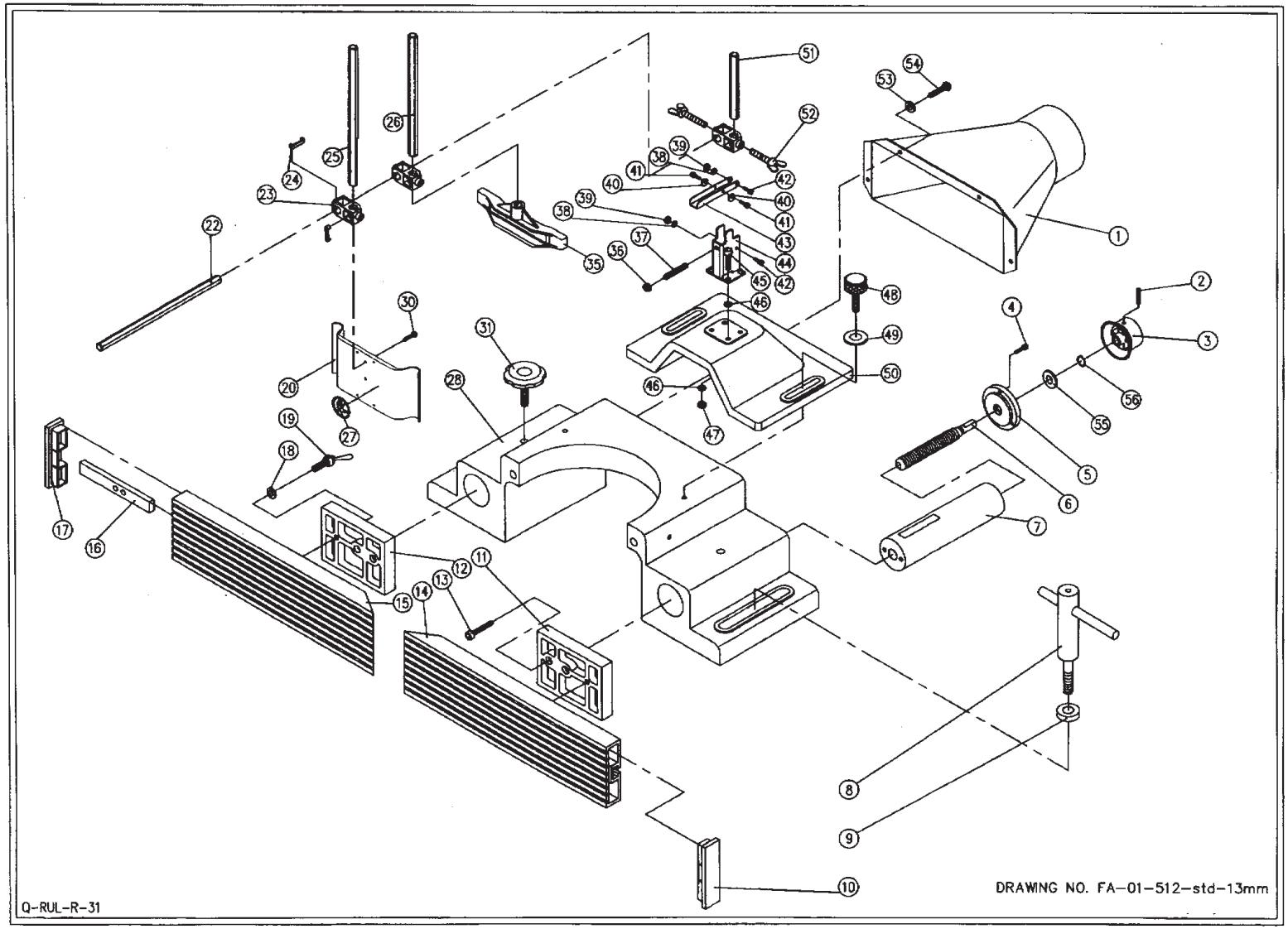
DRAWING NO. FA-01-512-std-13mm
Q-RUL-R-31

BACKWARD TILT -SPINDLE ASSY.

2013/3/27

REF NO.	PART NUMBER	DESCRIPTION	FOR Ø30,Ø35mm or 1-1/4"	Q'TY
101	5111521	SPINDLE NUT	FOR Ø30,Ø35mm or 1-1/4"	
102	5111570	KEYED WASHER		
103	5117153	SPACER SET Ø30mm	Ø30mm	1
	5117155	SPACER SET Ø35mm	Ø35mm	
	5117154	SPACER SET	Ø1-1/4"	
104	5111110	RETAINING RING NUT	FOR Ø30,Ø35mm or 1-1/4"	1
105	5111101	CHUCK BUSHING (opt.)		opt.
106	5111092	BUSHING 8mm (opt)	8mm	opt.
	5111094	BUSHING 6mm (opt)	6mm	opt.
107	5111090	COLLET CHUCK(opt.)	12mm	opt.
	5111090-1	COLLET CHUCK(opt.)	1/2"	opt.
108	5111087	INTERCHANGEABLE SPINDLE	Ø30mm	
	5111089	INTERCHANGEABLE SPINDLE	Ø35mm	
	5111085	INTERCHANGEABLE SPINDLE	Ø1-1/4"*120mm	1
109		HEX SOC HD SCR	M5x16	4
110	5121070	PLATE		1
111		BEARING-top	6008Z	2
112		KEY	6x54	1
113		RETAINING RING	S40	1
114	5111040	SHAFT	for under Ø35mm inter. spindle	1
115		DISK SPRING	61.5x40.5x0.7	2
116		BEARING-bottom	6206Z	1
117	5111130	SPACER		1
118	5162430	SPINDLE PULLEY		1
119	5111170	NUT		1
120		HEX SOC SET SCR	M6x6	1
121		BELT		1
122	5162420	BUSHING		1
123	5111521-P30	SAFETY NUT W/WASHER (opt.)	Ø30mm	opt.
	5111521-P35	SAFETY NUT W/WASHER (opt.)	Ø35mm	opt.

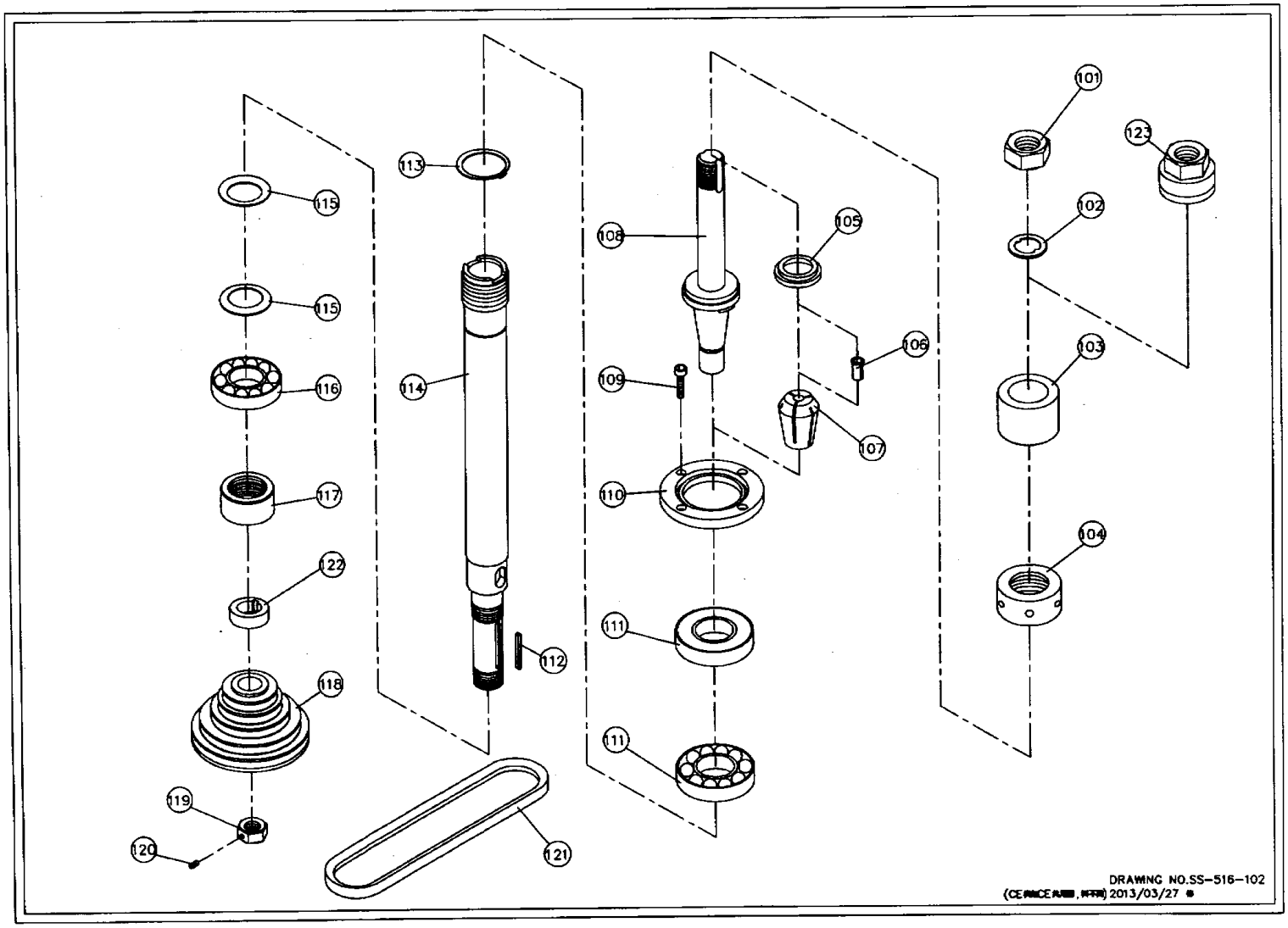
101
123
102
103
104
105
106
107
108
109
110
111
111
112
113
114
115
115
116
117
122
118
119
120
121
DRAWING NO.SS-516-102
(CE仕様)2013/03/27

BACKWARD TILT -W/O SLIDIING TABLE

REF NO.	PART NUMBER	DESCRIPTION		Q'TY
201	5162360	INSERT RING FOR TILT		1
202	5157110A	INSERT RING	ϕ 72*OD ϕ 125	1
203	5157120A	INSERT RING	ϕ 125*OD ϕ 170*10t	1
204	5157130A	INSERT RING	ϕ 170*OD ϕ 220*10t	1
205	5125040	INSERT RING	ϕ 220*OD ϕ 261*14.5t	1
206	5111560	DUST COLLECTOR		1
207		CHEESE HD SCREW	M5x10L	2
208		FLAT WASHER	M5	2
209	5163011	TABLE	1000x800	1
210		FLAT WASHER	M12	4
211	5161016D	CABINET		1
212		FLAT WASHER	M12	4
213		HEX. SCREW	M12x35L	4
214	5161060A	CONTROL PANEL		1
216	5161024	MACHINE DOOR		1
217		HANDLE	A-172-H	1
218		LATCH	A-172-1	1
222	12C1061	BLOCK		1
223		HEX SOC HD SCR	M5x16	2
224		CHEESE FLAT HD SCR	M6x25L	4
225	516L4060	CONTROL BOX		1
226	5121411	REAR DOOR		1
227		CHEESE HD SCREW	M6x40L	4
228		PIN	Ø8x45L	1
229	5112320	BRACKET		1
230		HEX SOC SET SCR	M6x12L	1
231	5112350	PAD		1
232	5112360	LEVER		1
233	5112330	PLUNGER		1
234	5112340	SPRING		1
235		HEX SOC SET SCR	M8x12L	1
236	5112310	ROD HORZ		1
237	5112291	ROD VERT		1
238	5112300	BLOCK		1
239		SPRING WASHER	M10	2
240		HEX. SCREW	M10x35L	2
241	5112280A	KNOB		1
242	5112260	STUD		1
243		FLAT WASHER	M10	1
244	5112270A	BODY		1
245		HEX SOC SET SCR	M8x12L	1
246		HEX SOC HD SCR	M6x12L	1
247	5112240	GUIDE BAR		1
248	5112550	KNOB W/STUD		2
249		HEX SOC FLAT HD SCR	M4x10L	1
250	5112250	RETAINER NUT		1
251	5112370	EXT. ROD		1
252	5112540	KNOB W/STUD		1
253	5112380A	STOP BLOCK		1
254	5161018	SCALE PLATE		1
255		HEX SOC FLAT HD SCR	M6x12L	4

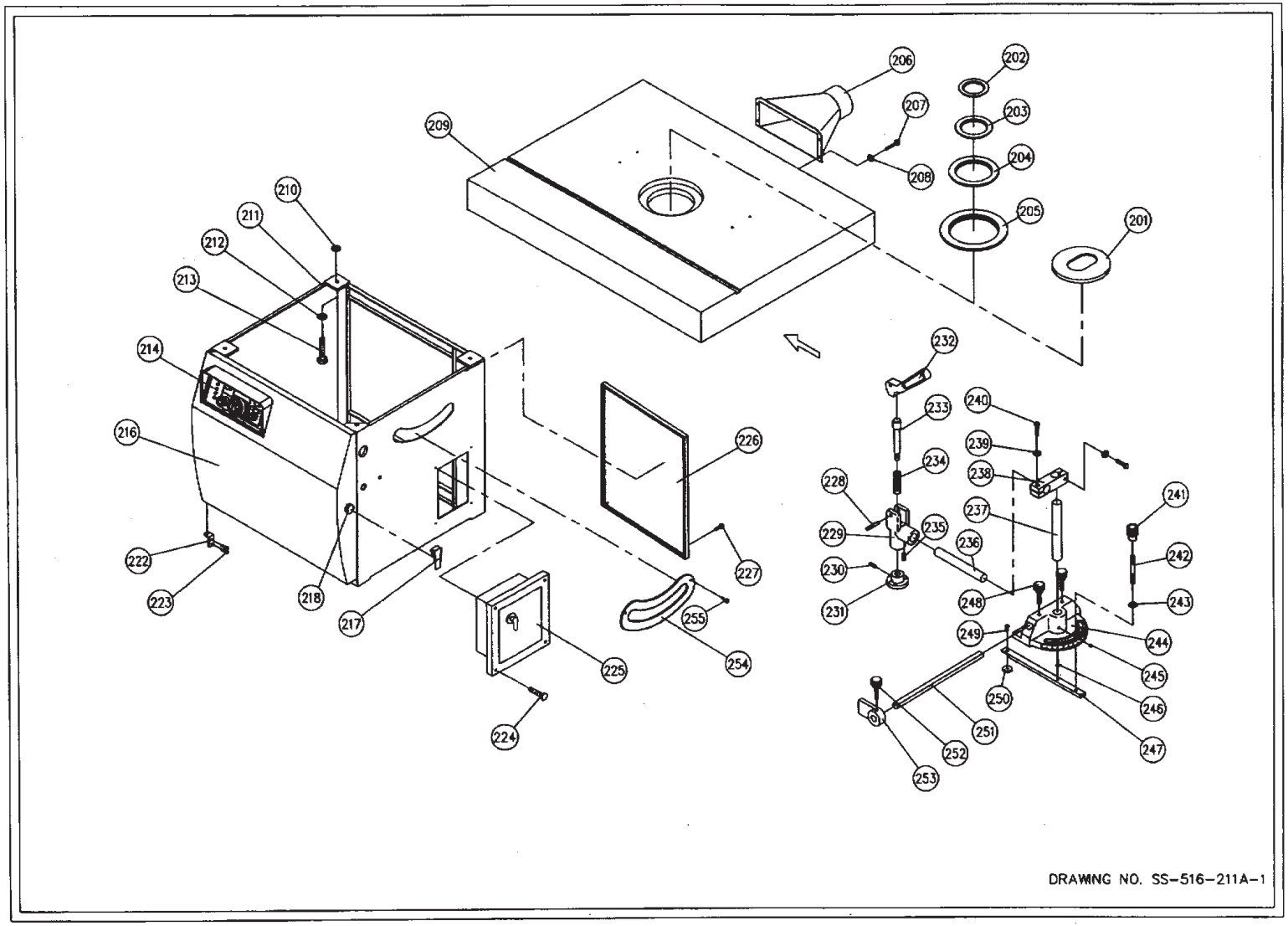
201
202
203
204
205
206
207
208
209
210
211
212
213
214
216
217
218
222
223
224
225
226
227
228
229
230
231
232
233
234
235
236
237
238
239
240
241
242
243
244
245
246
247
248
249
250
251
252
253
254
255
DRAWING NO. SS-516-211A-1

BACKWARD TILT -W/ SLIDIING TABLE

REF NO.	PART NUMBER	DESCRIPTION		Q'TY
301	5162011	TABLE	1000x800	1
306		HEX SOC HD SCR	M8x45L	6
307	5114100	BEARING RACE		6
308	5114110	ROLLER		6
309		BEARING	6004VV	6
310		RETAINING RING	R42	6
311	5114140	BUSHING		6
312	5114060	BUSHING NUT		1
313		HEX SOC SET SCR	M6x25	1
314	5114080	NUT KNOB		1
315		SPRING WASHER	M10	1
316		HEX. NUT	M10	1
317	5162190A	SHAFT		1
318	5162410	SPRING		1
319	5162400	BUSHING		1
320		PIN	Ø8x45L	1
321	5112320	BRACKET		1
322		HEX SOC SET SCR	M6x12L	1
323	5112350	PAD		1
324	5112360L	LEVER		1
325	5112330	PLUNGER		1
326	5112340	SPRING		1
327		HEX SOC SET SCR	M8x12L	1
328	5112310	ROD HORZ		1
329		HEX. SCREW	M10x35L	2
330		SPRING WASHER	M10	2
331	5112300	BLOCK		1
332	TC11120	ROD VERT		1
333		RETAINING RING	S25	1
334	5112540-3	KNOB W/STUD	M8x25	2
335	5112280A	KNOB		1
336	5112260	STUD		1
337		FLAT WASHER	1/2"	1
338	TC11130	BODY		1
339	5124021	SLIDING TABLE		1
340	5112370	EXT. ROD		1
341	5112540-3	KNOB W/STUD	M8x25	1
342	5112380A	STOP BLOCK		1
343	55F3090A	TENONING TABLE		1
344	55F3091	PLATE		2
345		HEX SOC HD SCR	M10X25	2
346	55F3092	SPECIAL WASHER	M10	2
347		HEX SOC SET SCR FOR SLIDING TABLE	M12x30L	1
348		HEX SOC SET SCR FOR SLIDING TABLE	M12x25L	1

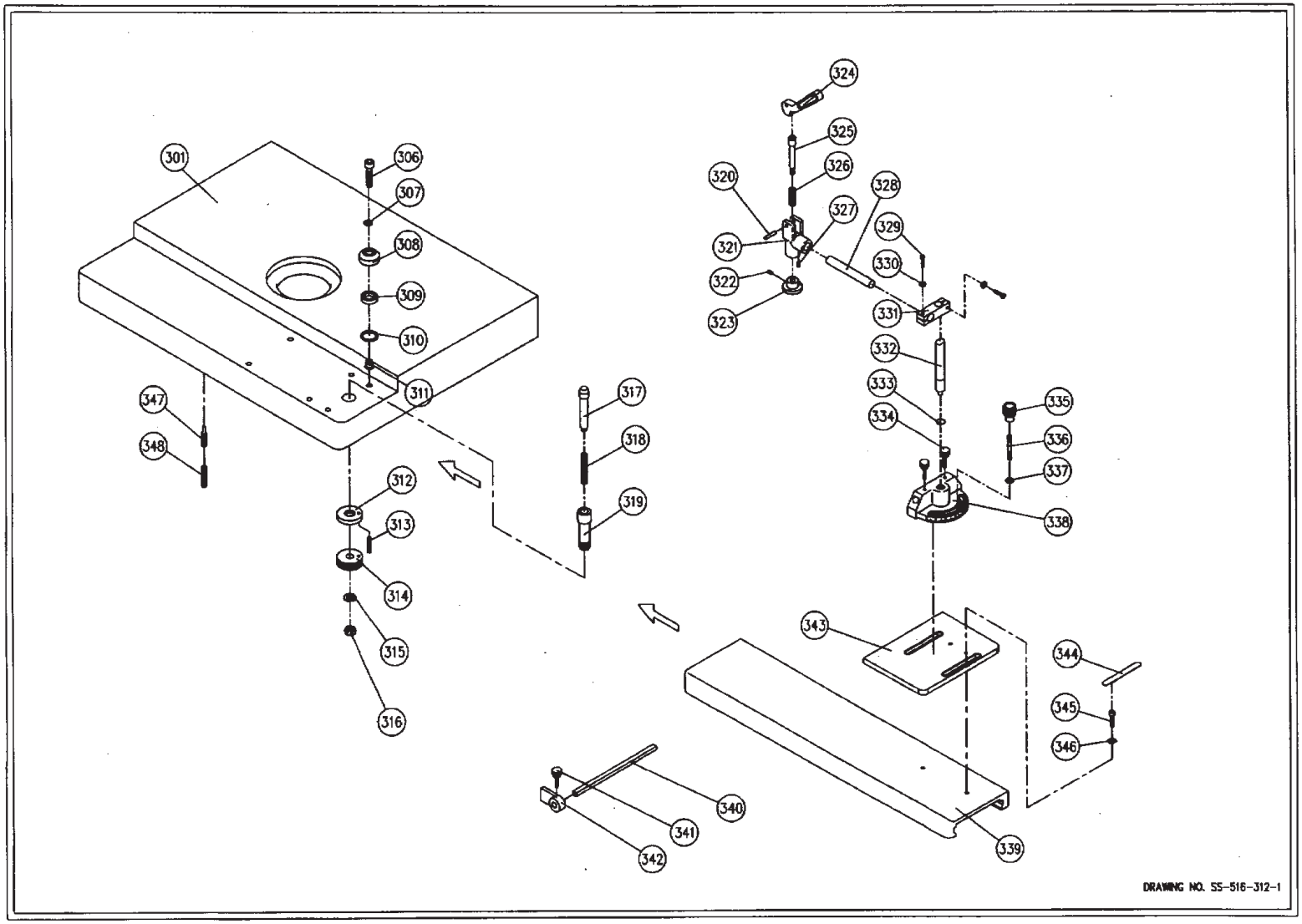
301
306
307
308
309
310
311
312
313
314
315
316
317
318
319
320
321
322
323
324
325
326
327
328
329
330
331
332
333
334
335
336
337
338
339
340
341
342
343
344
345
346
347
348
DRAWING NO. SS-516-312-1

BACKWARD TILT -W/ DIGITAL READ OUT INDICTOR

REF NO.	PART NUMBER	DESCRIPTION		Q'TY
401		HEX. SCREW	M10x30L	4
402		SPRING WASHER	M10	4
403		MOTOR	7.5HP or 5.5HP	1
404	5121220	BUSHING		1
405	5162430	MOTOR PULLEY	50Hz	1
406	5111550	COVER		1
407		HEX SOC SET SCR	M10x40L	1
408		HEX. NUT	M10	2
409		HEX. SCREW	M10x50L	1
410		FLAT WASHER	M10	1
411	5111480	SPACER		1
412	5162101	MOTOR PLATE		1
413	5162390	HANDLE		1
414		HEX. NUT	M16	1
415		HEX. SCREW	M5x16L	1
416		HEX. NUT	M5	1
417		HEX SOC HD SCR	M10x30L	1
418		FLAT WASHER	M10	1
419	5111470	SPACER		1
420	5111440	STUD		1
423	5161430	LINK		1
424		FLAT WASHER	M8	1
425		HEX. SCREW	M8x25L	1
426		HEX. NUT	M16	1
427		HEX. SCREW	M8x12L	1
428	5111450	STUD		1
429	5162073	MPTOR SUPPORT		1
430		FLAT WASHER	M8	1
431		HEX. SCREW	M8x16L	1
432		HEX SOC HD SCR	M8x30L	4
433	5111051	DRAW BOLT		1
434	5111060	SPECIAL WASHER		1
435		HEX. NUT	1/2"	2
436	5162052	SLOPE HOUSING		1
437		HEX SOC HD SCR	M5x20L	2
438	5111250A	GEAR		1
439	5111260	WORM COVER		1
440		HEX SOC HD SCR	M5x20L	4
441	5162083	SLEEVE		1
442	5162130	KEY		1
443	5162291A	HOUSING		1
444	5162300A	PIN		1
445	5162450	SPRING		1
446	5162470	NUT		1
447	5162460	ADJ. NUT		1
448	5162380A	SUPPORT		1
449	5162440	LINK		1
450		HEX. SCREW	M8x35L	1
451		NYLON NUT	M8	1

BACKWARD TILT -W/ DIGITAL READ OUT INDICTOR

REF NO.	PART NUMBER	DESCRIPTION		Q'TY
452	5122300	CABLE ASSY		1
453	11C3030	HOUSING		1
454	11C1050	HOUSING		1
455		LIMIT SWITCH	SHL-Q2155	1
456		CHEESE HD SCREW	M4x25L	2
457	11C3040	HOUSING		1
458	11C1070	BLOCK		1
459	11C1060	KEY		1
460		HEX SOC HD SCR	M5x20L	1
461		HEX SOC HD SCR	M5x16L	3
462		STEEL BALL	8.5mm	1
463		SPRING		1
464		HEX SOC SET SCR	M10x10L	1
465	5111451-1	LOCK KNOB/STUD		1
466	5121280	SCREW BOLT		1
467		KEY	4x12	1
468	5162373	WORM BOLT		1
469		KEY	4x24	2
470	5162063	FIXED SOCKET	126mmL for digital read out indicator	1
471		HEX SOC HD SCR	M6x25L	2
472		RETAINING RING	S25	1
473	5162490	BLOCK	t:15mm	1
474	5162480	BLOCK	t:20mm	1
475		HEX. SCREW	M8x50	2
476		HEX SOC SET SCR	M5x6L	1
477	5203100	BUSHING	t:14mm	1
478		HEX SOC SET SCR	M6x8	1
479	5162500	COPPER BUSHING	t:11.5mm	2
480	5162250	GEAR		1
481		HEX SOC SET SCR	M5x6L	1
482	5162260	MAIN GEAR		1
483	5161130	HANDWHEEL FOR SPINDLE HEIGHT		1
484		HANDLE	M10	1
485	5111610	SPECIAL NUT	⌀25-14 thread	1
486	5111320	HANDWHEEL		1
487		FLAT WASHER	M12	1
488		CUP NUT	M12	1
489		CABLE ASSY FOR SPINDLE HEIGHT	T1060	1
490		HEX SOC HD SCR	M5x16	4
491	5203190A	PLATE		1
492		RETAINING RING	S17	1
493		BEARING	6003Z	2
494	5201040	BEARING HOUSING		1
495		HEX SOC FLAT HD SCR	M5x16	3
496		RETAINING RING	R35	1
497		HEX SOC SET SCR	M5x6	1
498	5201030	SHAFT		1
499		DIGITAL READ OUT INDICATOR	PIODA0902 1.0 EB	1
500		HEX SOC SET SCR	M5x6	1

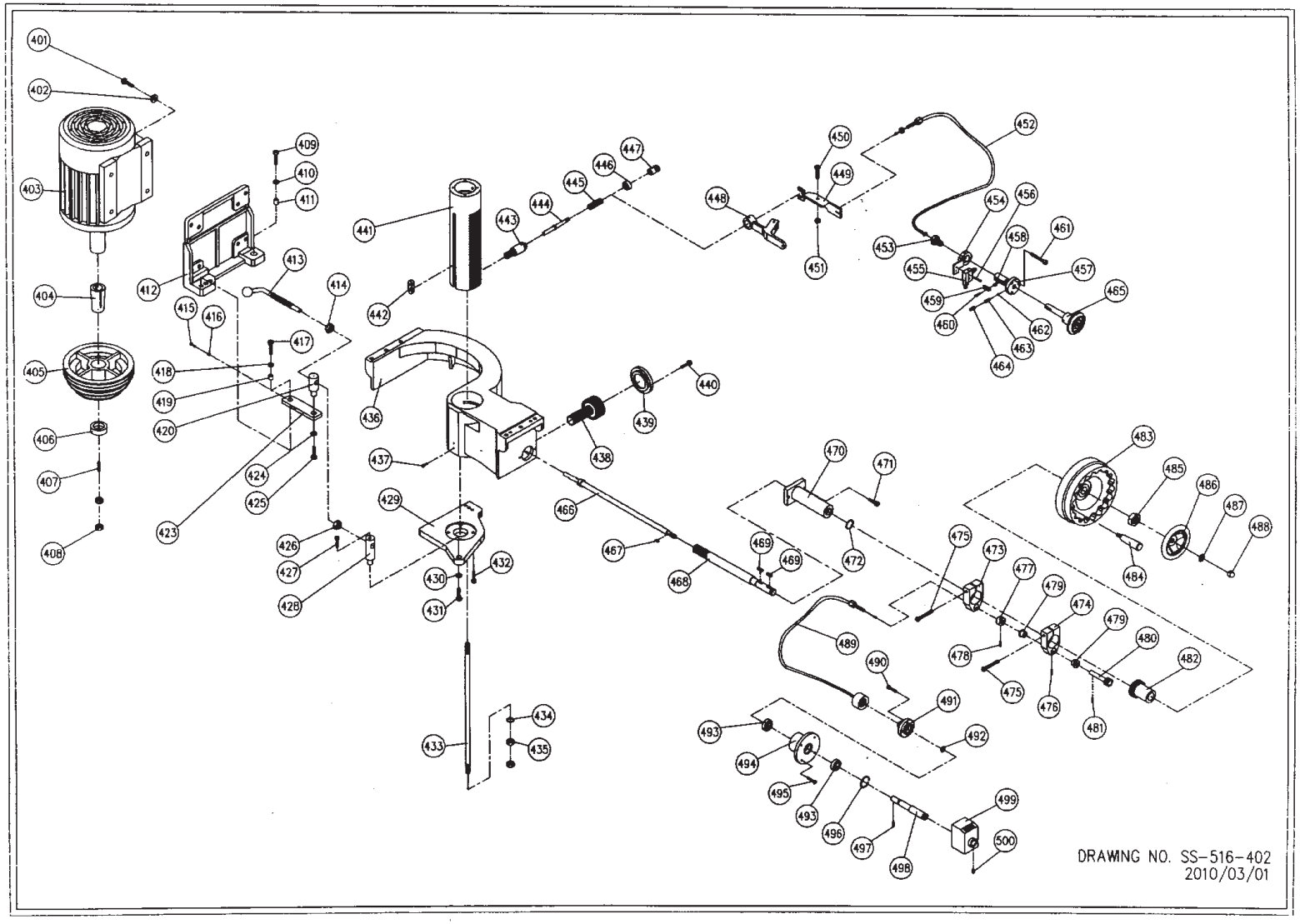
401
402
403
404
405
406
407
408
409
410
411
412
413
414
415
416
417
418
419
420
423
424
425
426
427
428
429
430
431
432
433
434
435
436
437
438
439
440
441
442
443
444
445
446
447
448
449
450
451
452
453
454
455
456
457
458
459
460
461
462
463
464
465
466
467
468
469
470
471
472
473
474
475
476
477
478
479
480
481
482
483
484
485
486
487
488
489
490
491
492
493
494
495
496
497
498
499
500
DRAWING NO. SS-516-402
2010/03/01

BACKWARD TILT ASSY.

REF NO.	PART NUMBER	DESCRIPTION		Q'TY
501	5161120	FIXED SCREW		1
502	55F1112	SPRING		1
503	5161110	KNOB		1
504		HEX. NUT	M10	1
505	5161080A	HANDWHEEL FOR TILT		1
506		COVER		1
507		KNOT W/STUD	M8x70L	1
508	12C2060A	BUSHING		2
509		HEX SOC HD SCR	M6x16L	2
510		BEARING	6004Z	2
511	5161090B	BEARING HOUSING		1
512		HEX. SCREW	M8x25L	2
513		FLAT WASHER	M8	2
514		HEX. SCREW	M8x40L	1
515		HEX. NUT	M8	1
516		BEARING	6205ZZ	2
517		KEY	4x24L	4
518	5162091A	WORM SHAFT	550mm	1
519		RETAINING RING	S20	5
520		HEX SOC SET SCR	M8x45L	2
521	5162150A	BEARING HOUSING	w/o hole	1
522		LOCK LEVER	95K M12x25	1
523	5162180	BUSHING		1
524		HEX SOC HD SCR	M6x16L	1
525	5162110	1/4 GEAR		1
526	5162040	INCLINING FRAME		2
527		HEX. SCREW	M8x45L	3
528		SPRING WASHER	M8	3
529	5162030	INCLINING FRAME RH		1
530		HEX SOC HD SCR	M10x55L	6
531	5162020	INCLINING FRAME LH		1
532		HEX. NUT	M8	4
533		SPRING WASHER	M8	4
534		HEX. SCREW	M10x55L	2
535		SPRING WASHER	M10	6
536	5113070	FIXED NUT		1
537		HEX. SCREW	M12x80L	1
538		RETAINING RING	R52	1
539	5165190	BRACKET		1
540		HEX SOC FLAT HD SCR	M5x16L	2
541	5165170	GEAR SHAFT	82mm L	1
542		KEY	4x12L	1
543	518H1470	GEAR	3/8"x20T for #545 chain	2
544		HEX SOC SET SCR	M6x12L	2
545		CHAIN	3/8"x40P	1
546		BEARING	6204Z	2
547	5162140B	HOUSHING		1

REF NO.	PART NUMBER	DESCRIPTION		Q'TY
548		HEX SOC SET SCR	M8x45L	3
549		SPRING WASHER	M8	3
550	5162160A	GEAR	24T	1
551	5162142	PLATE		1
552		BUTTON HEAD SOC SCREW	M4x10L	2
553	5165180	SHAFT	128.7mm L	1
554	5162170B	GEAR		1
555	5162141	HOUSHING		1
556		HEX SOC HD SCR	M6x12L	4
557		NYLON NUT	M8	3
558	5165210	GEAR	3/8"x30T for #561 gear and #56	1
559		HEX SOC SET SCR	M8x20L	1
560		CHAIN	3/8"x62P	1
561	5201050	GEAR	3/8"x15T	1
562		BEARING	6003ZZ	2
563	5203380	BUSHING		1
564	5203370	HOUSHING		1
565		RETAINING RING	R35	1
566		HEX SOC SET SCR	M8x8	1
567		RETAINING RING	S17	1
568		HEX SOC SET SCR	M8x35	2
569		HEX FLAT SOC HD SCR	M5x16	4
570	5201030	SHAFT		1
571		DIGITAL READ OUT INDICATOR	PIODA0912 1.0 IB	1
572		HEX SOC SET SCR	M5x6	1

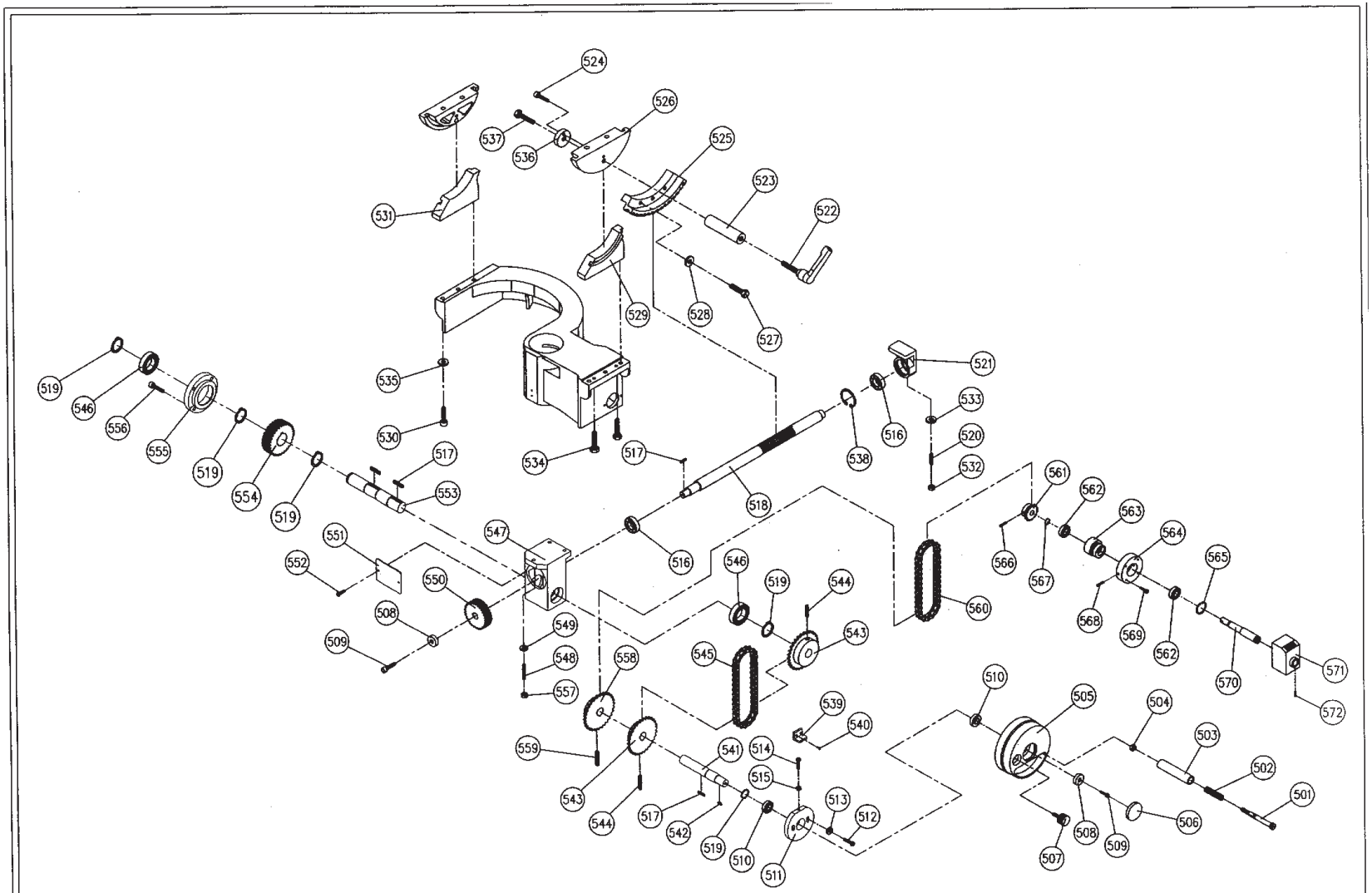

DRAWING NO. SS-516-503

BACKWARD TILT --SPEED INDICATOR ASSY.

REF NO.	PART NUMBER	DESCRIPTION		Q'TY
601		CHEESE HD STEEL SCR	M4x10L	2
602	5117550A	FORK		1
603		CHEESE HD STEEL SCR	M4x16L	2
604	5162270A	RACK		1
605		HEX SOC SET SCR	M8x5L	1
606	5117470B	GEAR		1
607	5117410	GEAR HOUSING		1
608	5117430	SENSON		1
	5117420	SPINDLE		1
609	5117510	COPPER SENSOR		1
610		PAN HD MACHINE SCR	M3x6L	1
611		PAN HD MACHINE SCR	5/32"x1-1/4"	5
612		PAN HD MACHINE SCR	5/32"x1-1/2"	1
613	5117480	TERMINAL		1
614		HEX NUT	5/32"	12
615		HEX SOC SET SCR	M8x8L	1
616	5117530	SPRING		1
617		STEEL BALL	ø7	1
618		HEX SOC SET SCR	M6x16L	1
619		HEX SOC HD SCR	M6x12L	4
620	5162280A	BRACKET		1
621		HEX SOC SET SCR	M6x12L	4

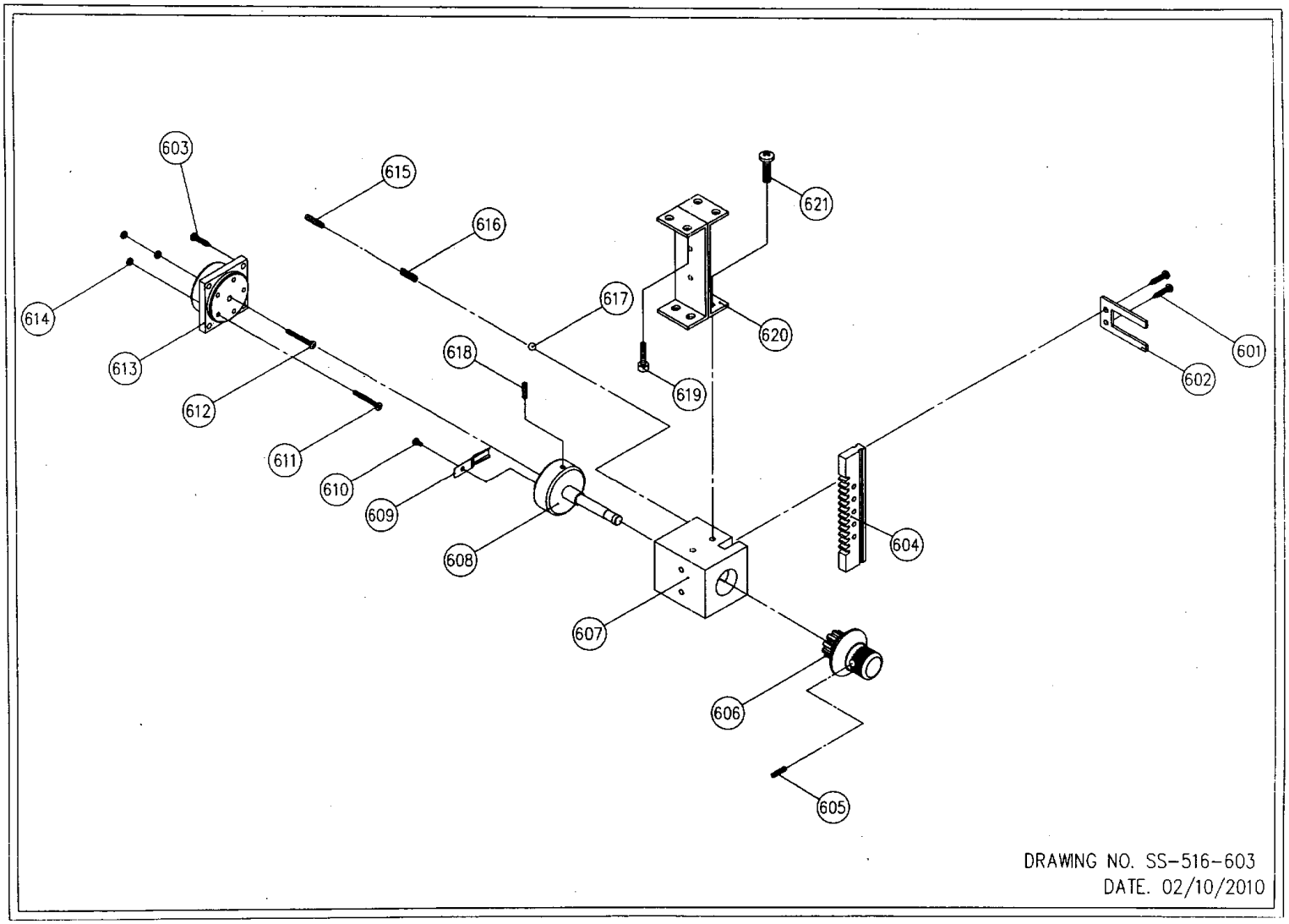

DRAWING NO. SS-516-603
DATE. 02/10/2010

2072 Alton Parkway. Irvine, CA 92606
Ph: 800.234.1976 | www.lagunatools.com

Laguna Tools is not responsible for errors or omissions.
Specifications subject to change. Machines may be shown with optional accessories.

© 2015, Laguna Tools, Inc. LAGUNA® and the LAGUNA Logo® are the registered trademarks of Laguna Tools, Inc. All rights reserved.